M-90-3
REV. A
APRIL,1993

MAINTENANCE MANUAL

MAXON®
RAILIFT®
B
SERIES LIFT GATES

MAXON® INDUSTRIES, INC.
1960 SLAUSON AVENUE
HUNTINGTON PARK, CA 90255

CONTENTS

CAM TYPE ONLY

WARNINGS.....PAGE 2

SECTION 1. TROUBLE SHOOTING.....PAGES 3 THRU 4

SECTION 2. GENERAL MAINTENANCE.....PAGES 5 THRU 17

SECTION 3. REPLACEMENT OF PARTS.....PAGES 18 THRU 34

SECTION 4. PARTS BREAKDOWN DRAWINGS.....PAGES 35 THRU 53

HYDRAULIC CLOSER ONLY

SECTION 1. TROUBLE SHOOTING.....PAGES 54 THRU 60

SECTION 2. GENERAL MAINTENANCE.....PAGES 5 THRU 17

SECTION 3. REPLACEMENT OF PARTS.....PAGES 18 THRU 34

SECTION 4. PARTS BREAKDOWN DRAWINGS.....PAGES 61 THRU 68

WARNING

1. READ THIS MANUAL AND UNDERSTAND COMPLETELY BEFORE MAINTAINING THIS UNIT.

2. CHECK LOCATION OF THE OTHER PEOPLE BEFORE OPERATING UNIT.

3. LOCK RETENTION RAMPS BEFORE CLOSING PLATFORM.

4. DO NOT STAND ON PLATFORM AND OPERATE UNIT WITH CAM FOLLOWERS ENGAGED.

5. DO NOT STAND UNDER PLATFORM WHEN LOWERING OR PLACE YOUR FEET WHERE PLATFORM COULD COME DOWN ON THEM.

6. DO NOT STAND IN FRONT OF OR ON TOP OF PLATFORM WHEN PLATFORM IS ON THE GROUND IN A VERTICAL POSITION. MAKE SURE PLATFORM HOLDING CHAIN IS PROPERLY FASTENED IN THIS POSITION.

7. ALWAYS ENGAGE SLIDE LOCKS WHEN PLATFORM IS IN VERTICAL POSITION AND VEHICLE IS READY TO BE DRIVEN ON HIGHWAY.

8. INSPECT CABLES FOR WEAR EVERY THREE MONTHS.

9. INSPECT HYDRAULIC HOSE FOR CRACKS AND DETERIORATION EVERY YEAR.

10. USE ONLY FACTORY AUTHORIZED PARTS FOR REPLACEMENT. THE PART NUMBERS ARE LISTED IN THE BREAKDOWN DRAWING FOR YOUR UNIT IN SECTION OF MAINTENANCE MANUAL.

11. WHEN REPLACING PARTS OR SERVICING UNIT DISCONNECT BATTERY.

12. DO NOT ALLOW CHILDREN TO RIDE OR PLAY WITH UNIT.

13. THE LIFT SHOULD OPERATE SMOOTHLY AND THE ONLY NOISE DURING OPERATION SHOULD BE FROM THE PUMP UNIT DURING THE RAISE OPERATION. ANY SCRAPING, GRATING OR AUDIBLE SUGGESTIONS OF ROUGH RUNNING SHOULD BE INVESTIGATED. THE CAUSE SHOULD BE LOCATED BEFORE FURTHER DETERIORATION OF PERFORMANCE OCCURS. REFER TO PAGE 17 FOR FURTHER CHECKS.

FAULT	CAUSE	REMEDY
Platform will not rise or reach floor of vehicle	1. Battery flat	Re-charge battery
	2. (Tractor/Trailer vehicles only) Electrical coupling to tractor not connected	Connect coupling
	3. Insufficient oil in the pump reservoir	Fill reservoir See Decal on pump.
	4. Cables incorrectly adjusted	Adjust cables.
Platform will not lower	1. Battery flat (voltage at solenoid low)	Re-charge battery
	2. (Tractor/Trailer vehicles only) Electrical coupling to tractor not connected	Connect coupling
	3. Emergency brake lock-up	Release emergency brake
Platform does not rise smoothly	1. Too much pump pressure	Check pressure
	2. Insufficient oil in the pump reservoir	Fill reservoir
	3 Air lock in hydraulic system	Operate RAISE control on the switch a few seconds at top of platform stroke. Repeat two more times, pausing between operations for one minute with platform on ground.
	3. Undue mechanical wear or lack of lubrication of lift	Lubricate or replace worn parts
Platform creeps down under no load condition	1. Hydraulic leak	Operate RAISE control on the switch at top of platform stroke for a few seconds.
	2. Cylinder seal failing	Replace cylinder seals.
	3. Dirt under valve in hydraulic pump	Clean the valve
Platform will only descend slowly	1. Flow control valve adjustment	Adjust flow control valve
	2. Insufficient maintenance and lubrication	Carry out maintenance and lubrication procedure
	3. Undue wear of mechanical components	Check freedom of all moving parts
	4. Dirt in the valve	Clean the valve
Can not engage the P/F retention chain	1. P/F does not close enough to allow retention chain to be engaged.	Adjust cam follower See pg. 15

FAULT	CAUSE	REMEDY
Platform will only descend slowly (Cont'd)	4. Incorrect oil in system. *See Footnote below	Oil should be Type "A" Automatic Transmission fluid
	5. Restricted hydraulic line	Check hose for external damage or "pinching"
Platform tilted	1. Incorrect cable adjustment	Adjust cable.
	2. Cable supporting low side of platform dislodged from it's normal lay	Check that cable is correctly seated in the grooves of the sheaves over which the cable passes
	3. Passage of cables, runners or platform obstructed	Check freedom of all moving parts associated with cable system
Unit will not lift rated load	1. Relief valve setting too low	Adjust relief valve setting.
	2. Hydraulic pump worn	Change worn parts or complete pump. See Pump Breakdown Illustrations
PLATFORM NOT LEVEL	1. 2 PC PLATFORM CHAINS TOO LONG	SHORTEN CHAINS
Pump will not operate	1. Battery flat	Re-charge battery
	2. (Tractor/Trailer vehicles only) Electrical coupling to trailer not connected	Connect coupling
	3. Electrical wiring to pump broken or corroded	Check wiring to pump
	4. Remote control switch wiring broken	Check wiring to remote control switches.
	5. Solenoid switch on pump faulty	Check solenoid switch.

*For cold weather operation

Hydraulic Fluid Chart

TEMPERATURE RANGE	ACCEPTABLE FLUIDS OR EQUAL
32 to 150° F	Exxon Univis J-26 Mobil DTE 24 Chevron EP9 Shell Tellus 927
-10 to 150° F	Exxon Univis J-26 Mobil DTE 13
-50 to 80° F	Mobil DTE 13 MIL-H-5606

The following information relates to the REMEDY column of the TROUBLE SHOOTING CHART.

REPLACE CYLINDER SEALS.

To check for cylinder seal leakage the cover will need to be removed from the main frame assembly. The platform should be operated up and down several times. The cylinder is checked as illustrated below.

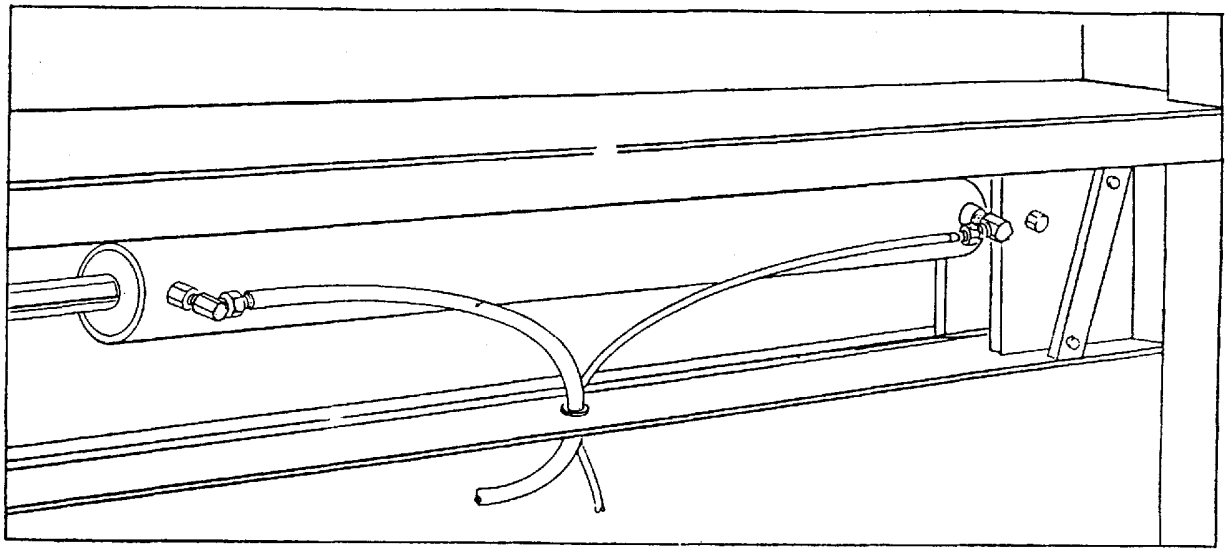

If there is a leak, the cylinder seals should be replaced. Seal kits are available from MAXON Industries Inc.
For Seal kit Part Number see Unit Parts Breakdown drawing for YOUR unit in Section 4 of this manual.
To replace the seals the cylinder will need to be removed from the main frame assembly and dismantled on a work bench. For removal of cylinder see Section 3, Page 34.
NOTE: There will be a slight seepage of oil during operation. This is not to be confused with a leak.

CLEAN VALVE.

Check valve could be slightly open. Slight adjustment in a CLOCKWISE direction may cure problem.

If not, valve should be removed, cleaned and inspected.

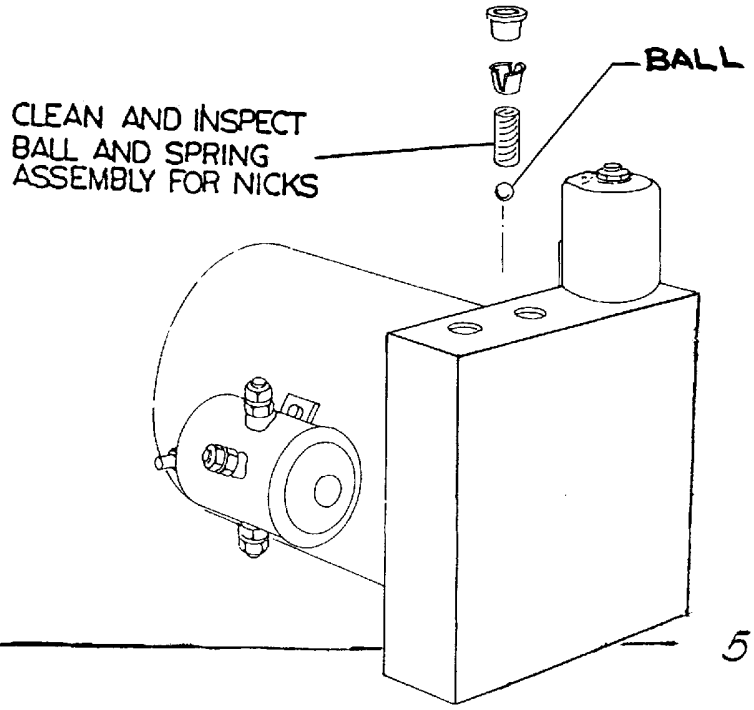

ADJUST—RELIEF—VALVE—SETTING

LOWER PLATFORM TO GROUND. REMOVE HOSE AND SWIVEL ELBOW FROM PUMP. INSTALL A 0-3000 P.S.I. PRESSURE GAUGE TO PUMP USING A HOSE TO ALLOW ACCESS TO THE PUMP PRESSURE PORT.

WARNING

DO NOT SET RELIEF PRESSURE HIGHER THAN REQUIRED OR DAMAGE TO THE UNIT COULD RESULT.

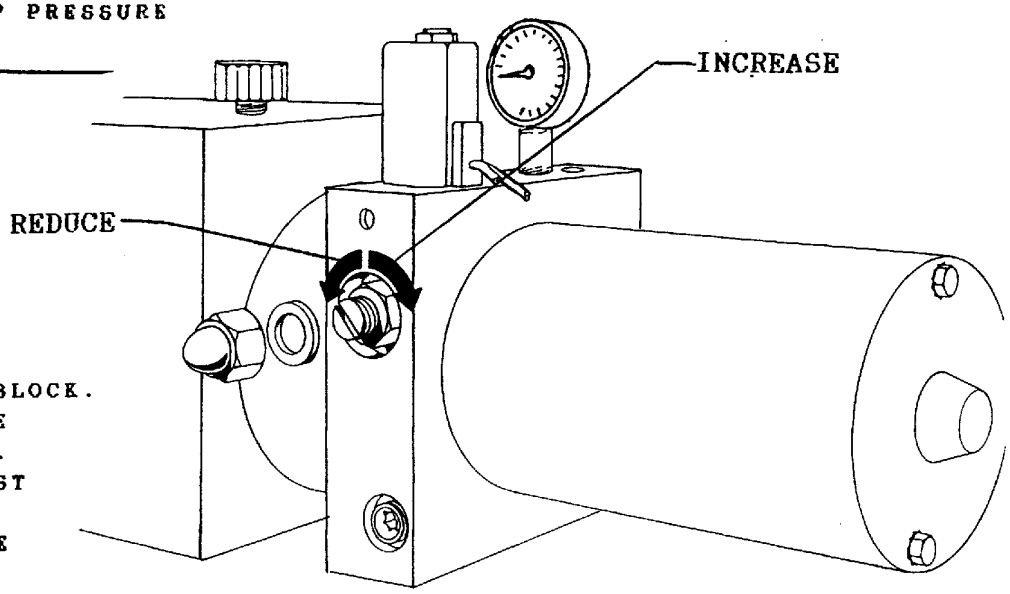

REMOVE HEX CAP FROM MOTOR BLOCK. USING CURB SIDE SWITCH MOVE TOGGLE TO "RAISE" POSITION. CHECK GAUGE READING. ADJUST RELIEF VALVE AS REQUIRED. AFTER ADJUSTING VALVE, MOVE TOGGLE TO "RAISE" POSITION SEVERAL TIMES TO RECHECK THE SETTING ON THE GAUGE.

RELIEF VALVE PRESSURE SETTING IS 2200 P.S.I.

If setting the correct pressure becomes a problem it may be necessary to remove and inspect the relief valve.

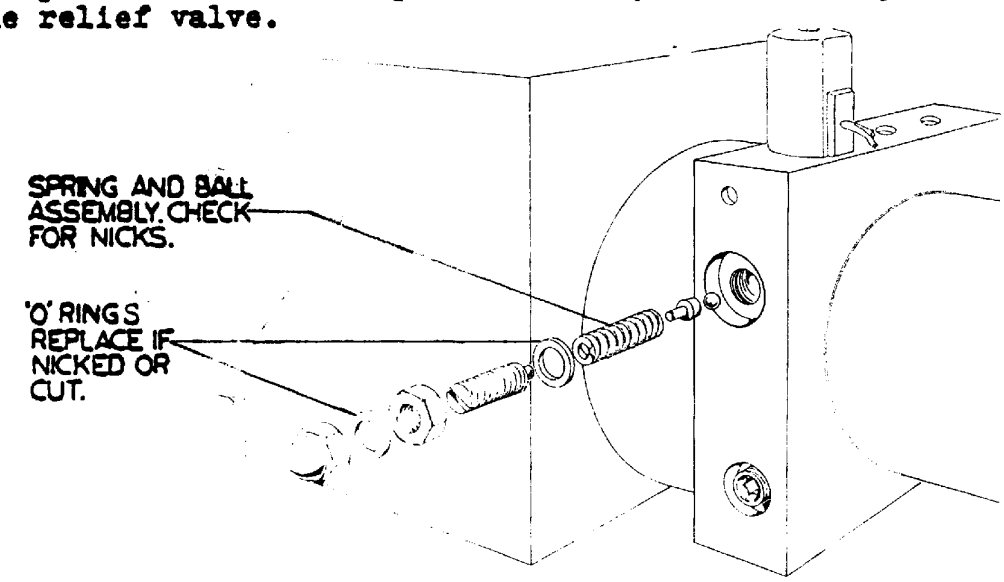

Reset spring and ball assembly by inserting 3/16"diameter rod into spring and tapping ball against seat with hammer.

RELEASING EMERGENCY BRAKE

IN THE EVENT THE RAILIFT WILL NOT LOWER, IT MAY BE NECESSARY TO RELEASE THE EMERGERNCY BRAKE ASSEMBLY.

1. REMOVE THE UPPER SHEAVE COVERS ON THE SIDE WHICH IS NOT LOWERING.

2. REMOVE THE UP-STOP AT THE TOP OF COLUMN.

3. BEING CAREFUL NOT TO RAISE THE GATE MORE THAN 1"-1/2", ACTIVATE THE RAISE SWITCH. THIS WILL RETRACT THE EMERGENCY BRAKE CAM AND ALLOW THE PLATFORM TO BE LOWERED. LOWER GATE APPROXIMATELY 12".

4. REPLACE UP-STOP TO ITS ORIGINAL POSITION. CYCLE RAILIFT SEVERAL TIMES TO INSURE IT OPERATES PROPERLY. REPLACE SHEAVE COVERS.

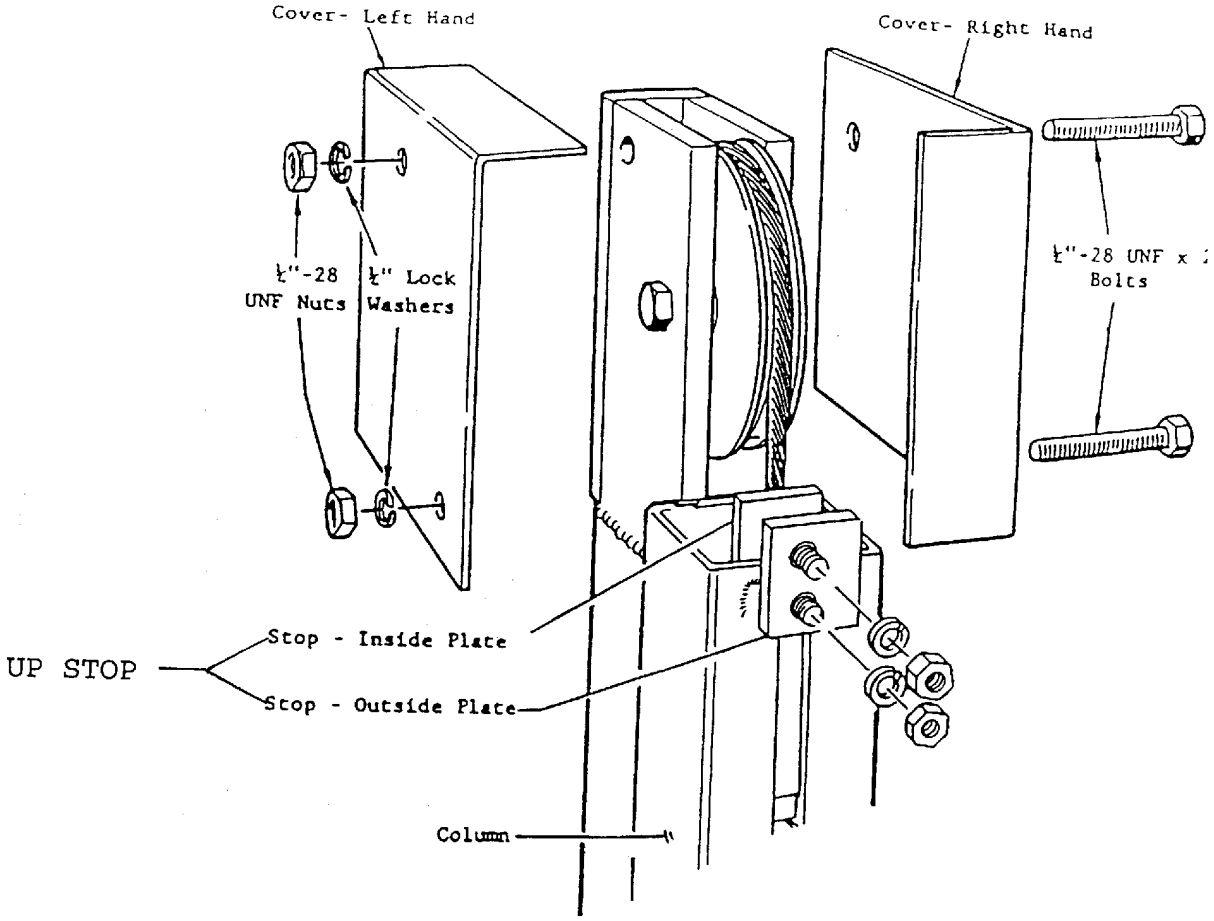

Drain and remove reservoir.
Check filter. If filter is clean, a worn pump is indicated.
Change pump assembly. For replacement parts see PUMP BREAKDOWN DRAWING.

Inspect coupling for wear. When installing pump assembly, make sure coupling is installed to motor shaft and pump shaft is installed to coupling.

COUPLING

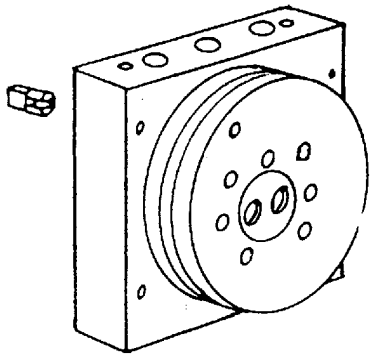

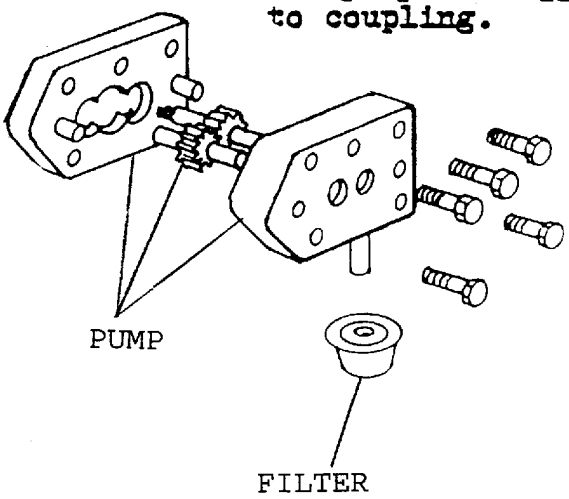

CHECK SOLENOID SWITCH

REMOVE BATTERY CABLE FROM SOLENOID AND HOLD IT AGAINST MOTOR TERMINAL. IF MOTOR OPERATES, THEN SOLENOID IS OK.

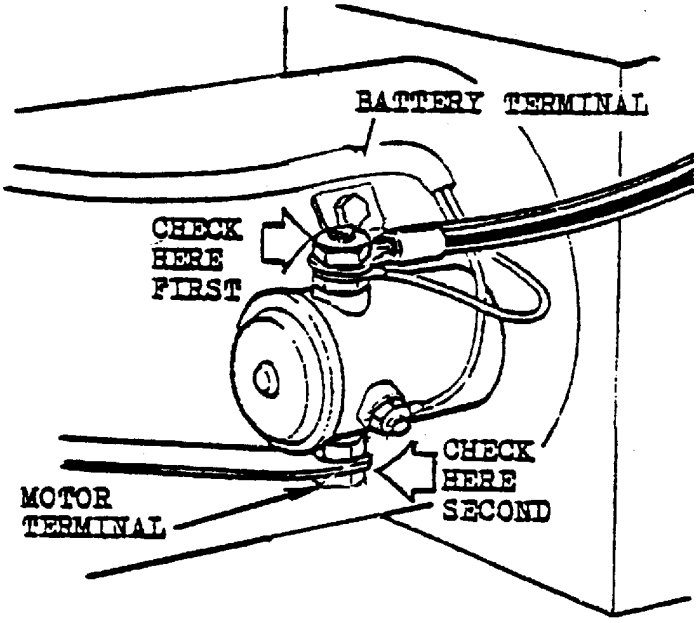

THE WIRING ON THE PUMP SOLENOID SWITCH THRU TO THE TRUCK SOLENOID (OR BATTERY) SHOULD BE CHECKED EVERY MONTH.
CABLE ENDS SHOULD BE CLEAN AND TIGHT. A LARGE AMOUNT OF GATE MALFUNCTION IS CAUSED BY LOOSE CABLE CONNECTIONS AND CORRODED CABLE CONNECTIONS.

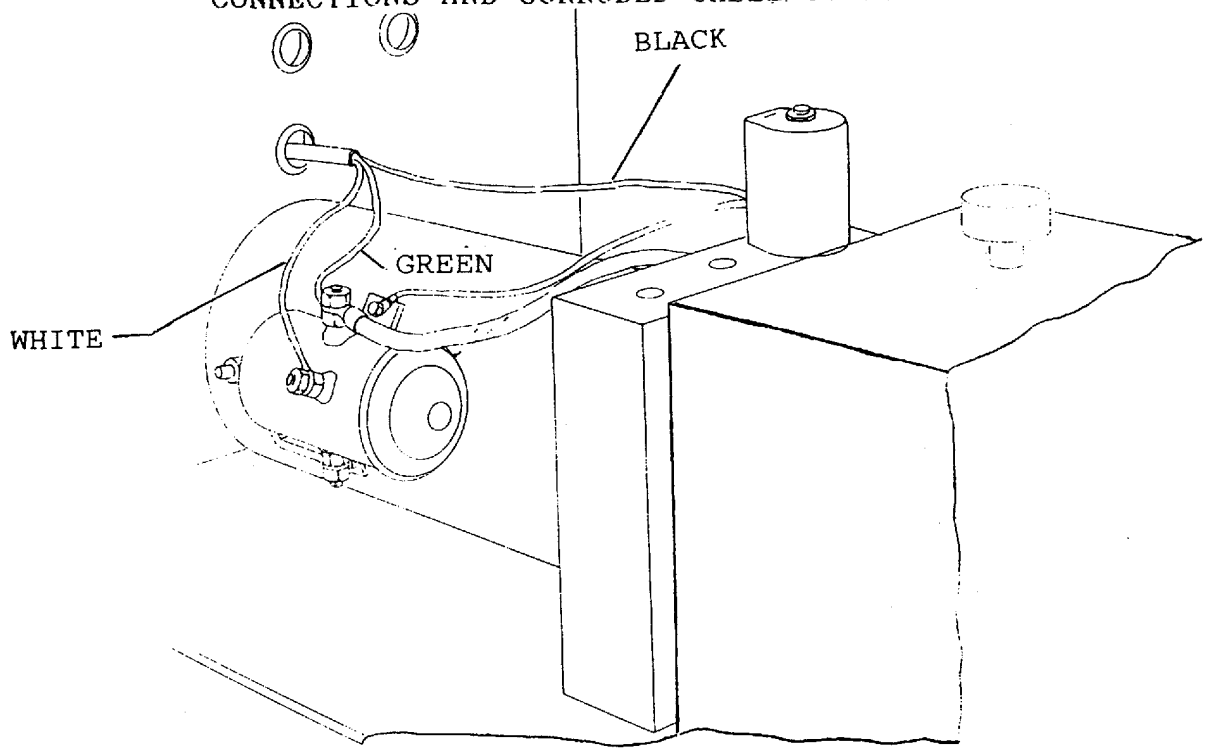

CAM TYPE

HYDRAULIC CLOSER TYPE

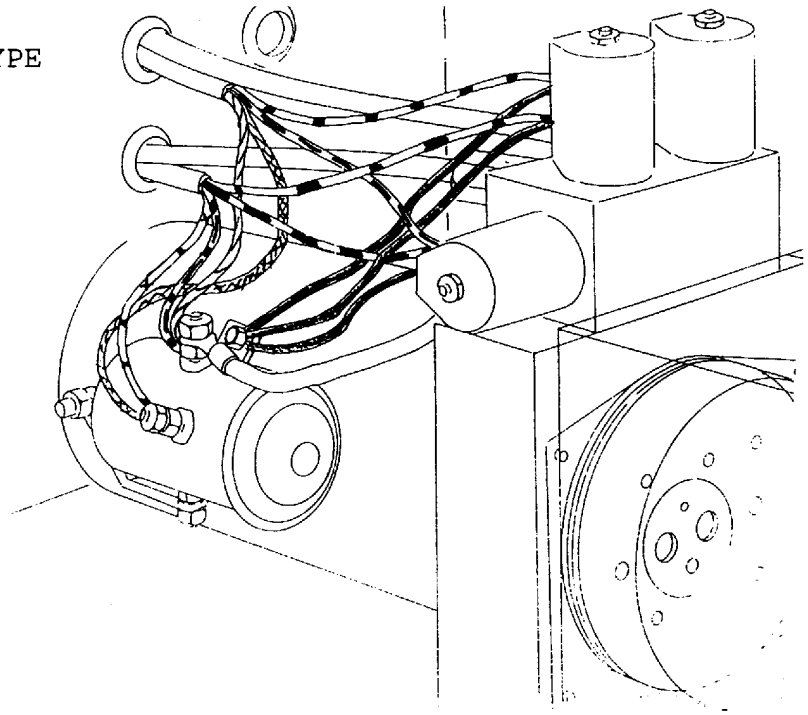

RC'S C/C ELECTRICAL ASSY SCHEMATIC

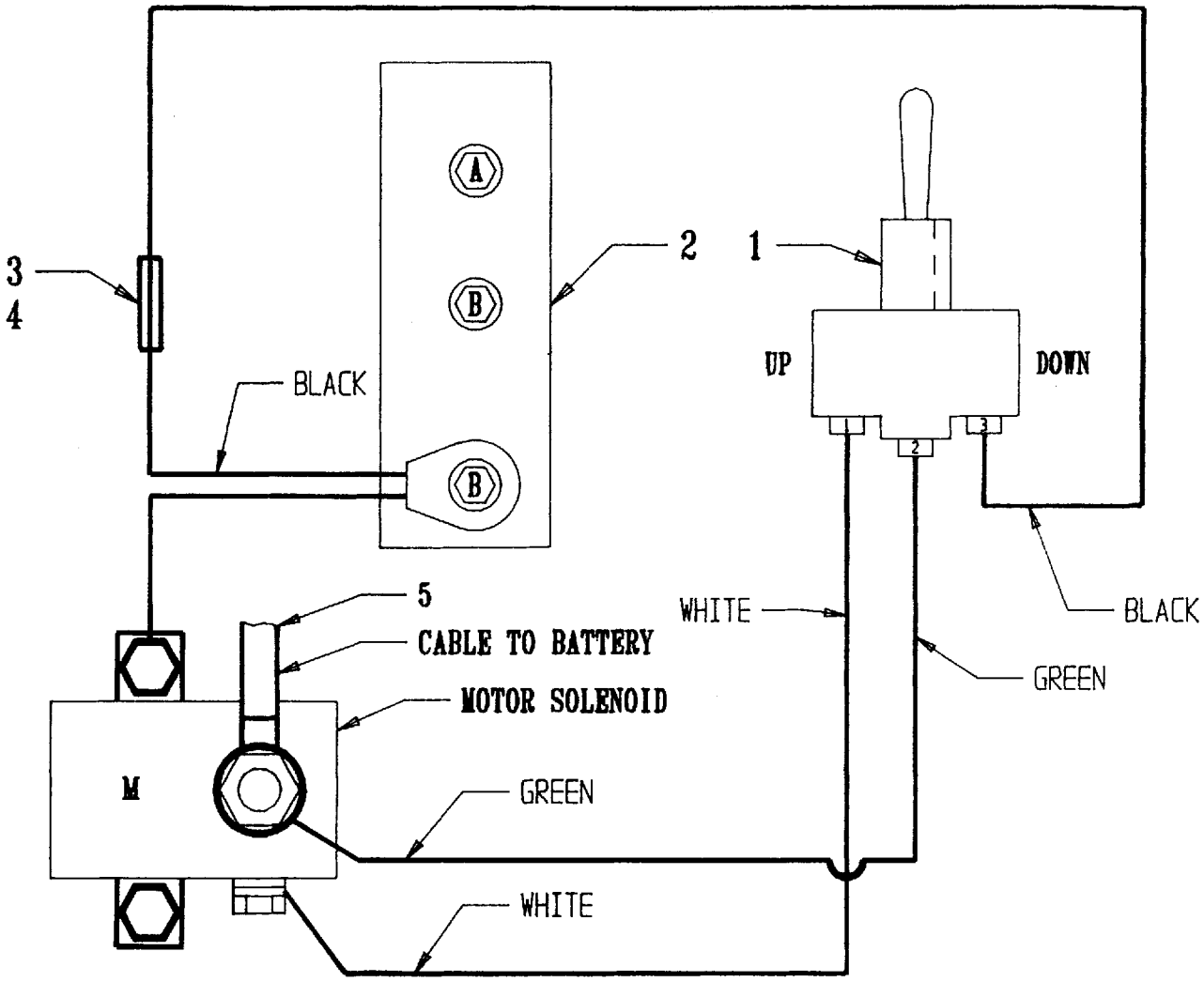

△1 PARTS ARE INCLUDED IN THE PARTS BOXES.

△2 PARTS ARE INCLUDED IN THE M/ASSY.

	QTY.	PART NO.	DESCRIPTION	ITEM NO.
△1	1	251871	CABLE 2 GAGE 32FT ASSY	5
△1	1	250702-01	TUBE, HEAT SHRINK 3/16"DIA. X 1 1/2"LG	4
△1	1	030491	BUTT CONNECTOR	3
△1	1	253342	PUMP ASSY RC'S H/C	2
△2	2	252427	ELECTRICAL HARNESS & SWITCH ASSY	1

RC'S H/C ELECTRICAL ASSY SCHEMATIC

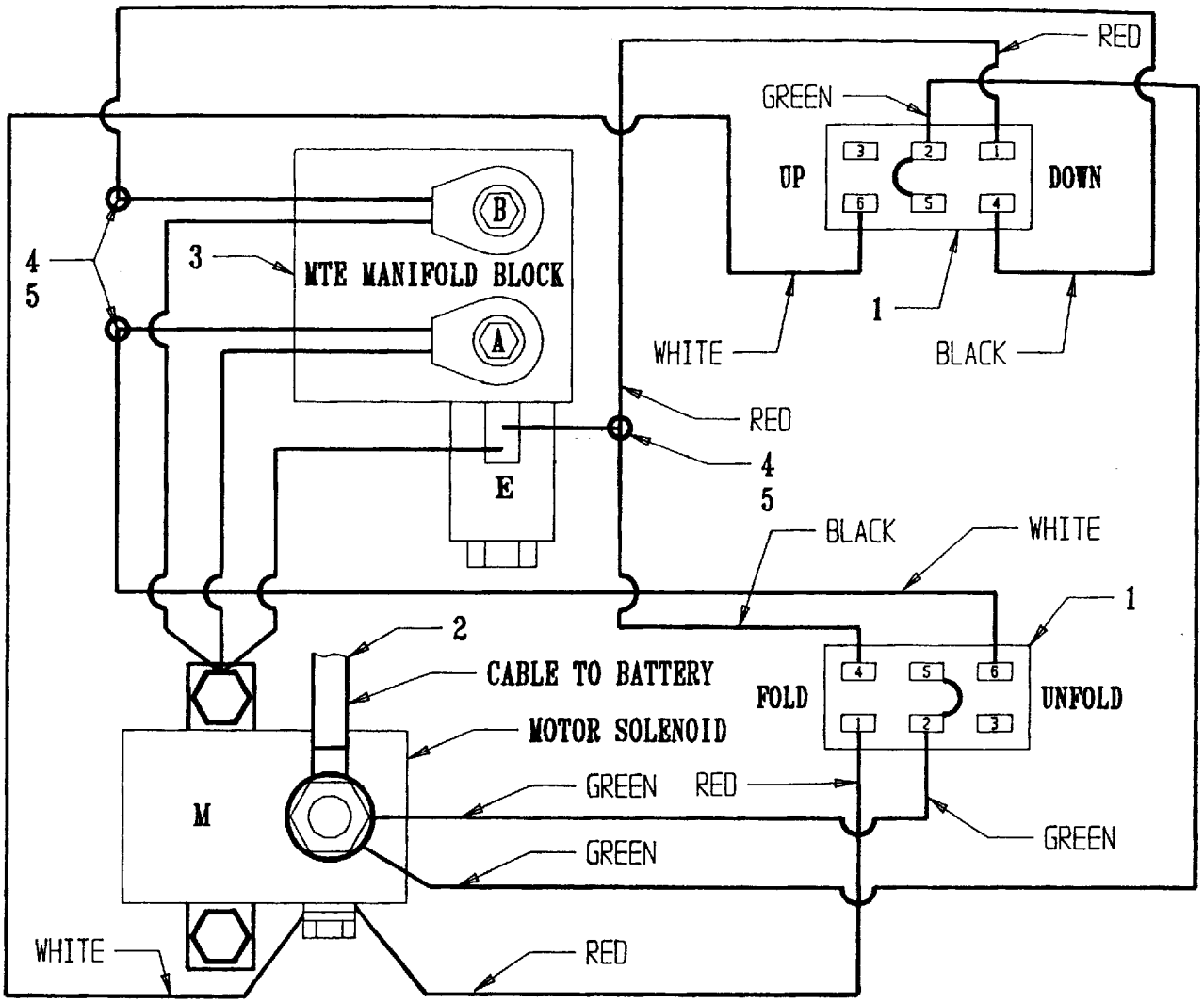

△1 PARTS ARE INCLUDED IN THE PARTS BOXES.

△2 PARTS ARE INCLUDED IN THE M/ASSY.

	QTY.	PART NO.	DESCRIPTION	ITEM NO.
				6
△1	3	250702-01	TUBE, HEAT SHRINK 3/16"DIA. X 1 1/2"LG	5
△1	3	030491	BUTT CONNECTOR	4
△1	1	253341	PUMP ASSY RC'S H/C	3
△1	1	251871	CABLE 2 GAGE 32FT ASSY	2
△2	2	252427	ELECTRICAL HARNESS & SWITCH ASSY	1

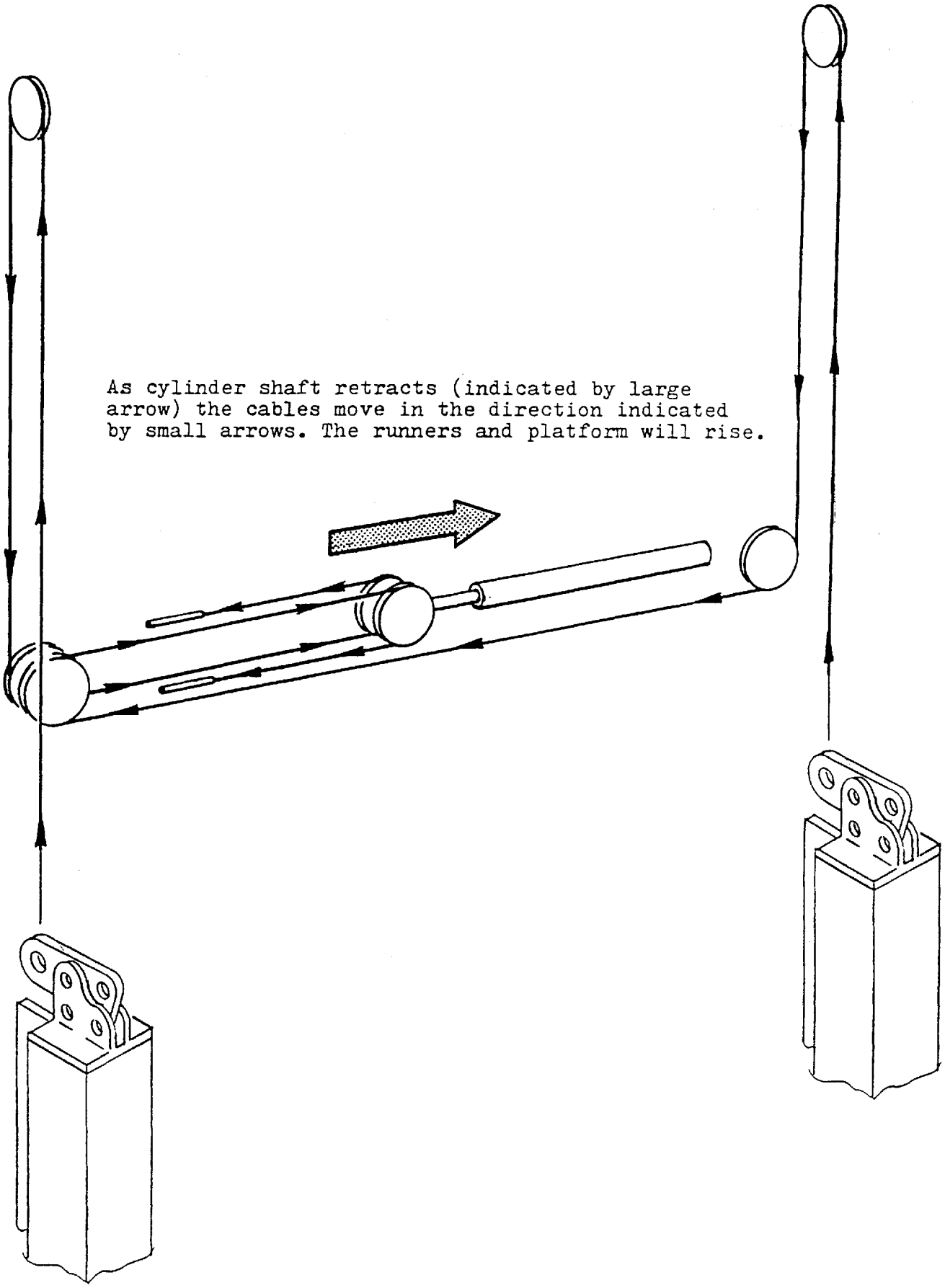
As cylinder shaft retracts (indicated by large arrow) the cables move in the direction indicated by small arrows. The runners and platform will rise.

Perform the following maintenance. (every three months)

The most important assemblies in your unit are the cables. These MUST be checked visually for broken wires, particularly in those areas where the cables pass around the sheaves during the up and down movement of the platform.
Remove the covers from the tops of the column assemblies and from the main frame.
Clean the cable area first and then make a visual check.

WARNING! DO NOT CHECK CABLES WITH FINGERS OR WITH UNIT OPERATING.

It will be necessary to run the platform up to bed height and then down to ground (stopping the unit frequently) to enable you to cover the required areas of cable.
If cables require replacement see SECTION 3.1. CABLE REPLACEMENT.

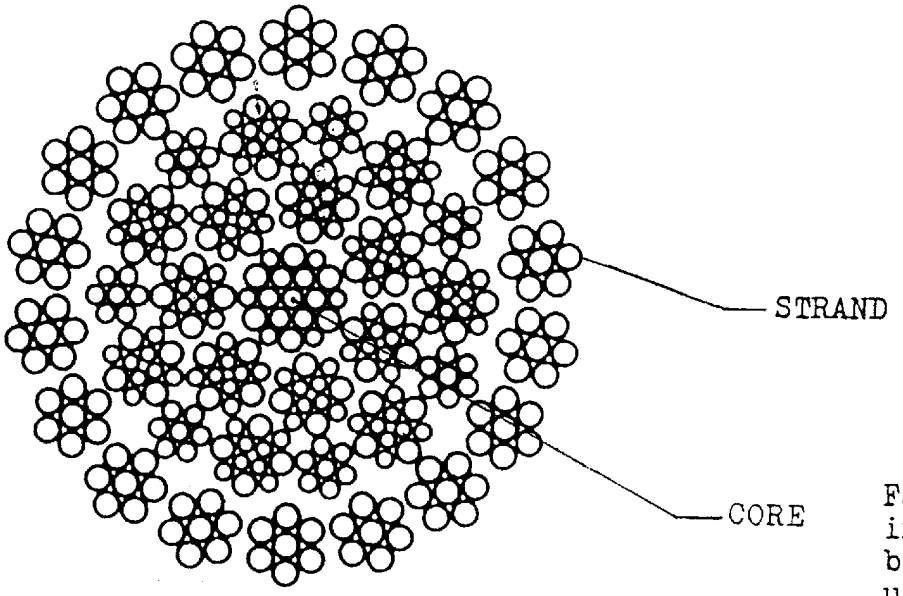

Composition of a cable.

Fatigue breaks occur in individual wires, the breaks being square and usually in the crown of the strands.

NOTE! THE "WARNING" PLATE ATTACHED TO THE RIGHT HAND END OF THE MAIN FRAME COVER GIVES EXPLICIT INFORMATION REGARDING CABLES.

THE CABLE CHECK SHOULD BE MADE BY FOLLOWING THE UNIT OPERATING SEQUENCE DESCRIBED IN STEP 2.15 ABOVE.

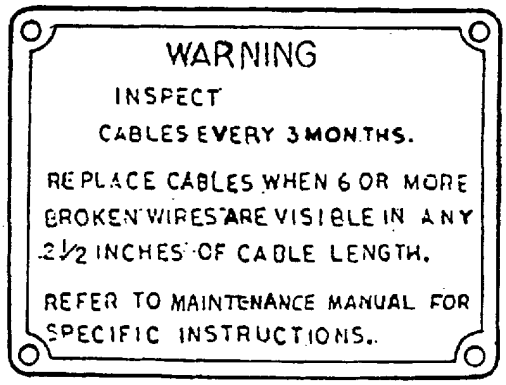

Under normal operating conditions (using the unit to it's rated capacity) the cables should not require adjustment at the 3 month inspection period. However, it is suggested that the unit be CHECKED at this time, anyway.

Remove the cover from the main frame assembly.

Using the curb side remote control switch, raise the platform. Watch the tops of the runners, right and left hand side of the unit BOTH runners should strike the stops in the column assemblies at the same time. Release the switch toggle.
In the main frame assembly check the amount of rod extending from the cylinder barrel. There should be 1" (or more) showing.
Under these conditions the cables DO NOT require adjustment.

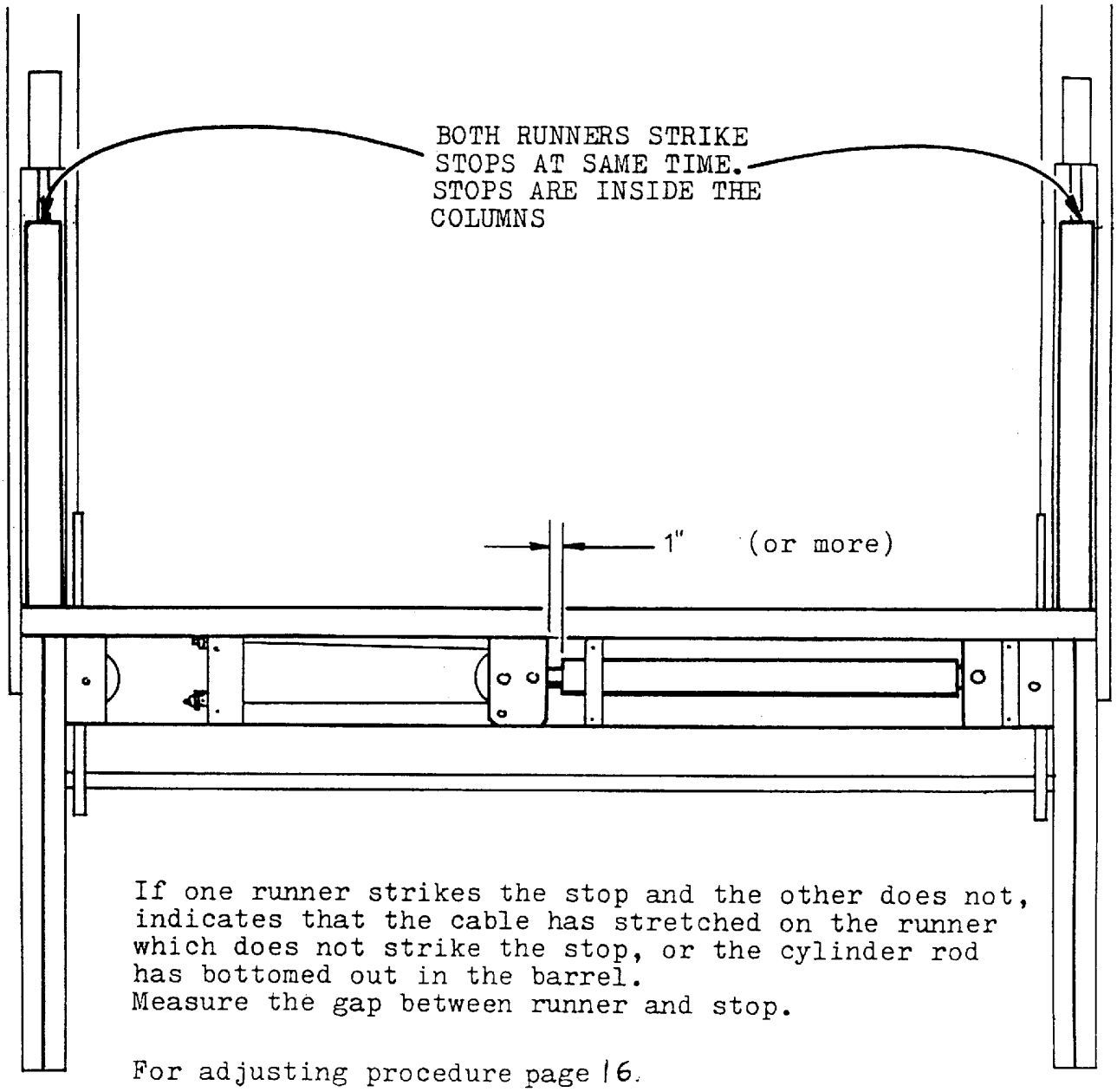

If one runner strikes the stop and the other does not, indicates that the cable has stretched on the runner which does not strike the stop, or the cylinder rod has bottomed out in the barrel.
Measure the gap between runner and stop.

For adjusting procedure page 16.

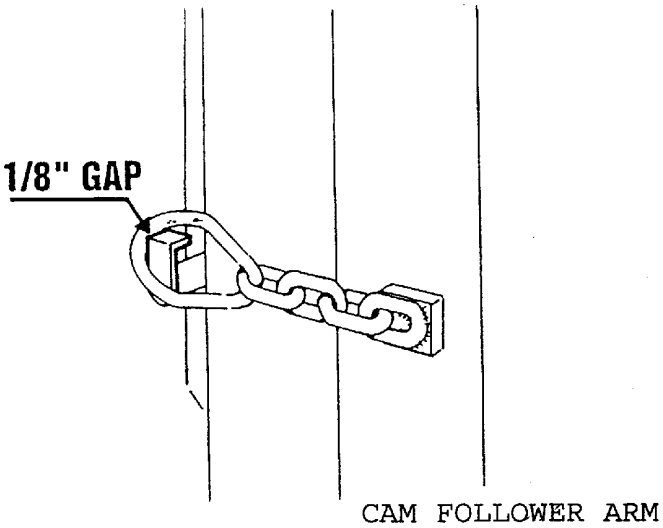

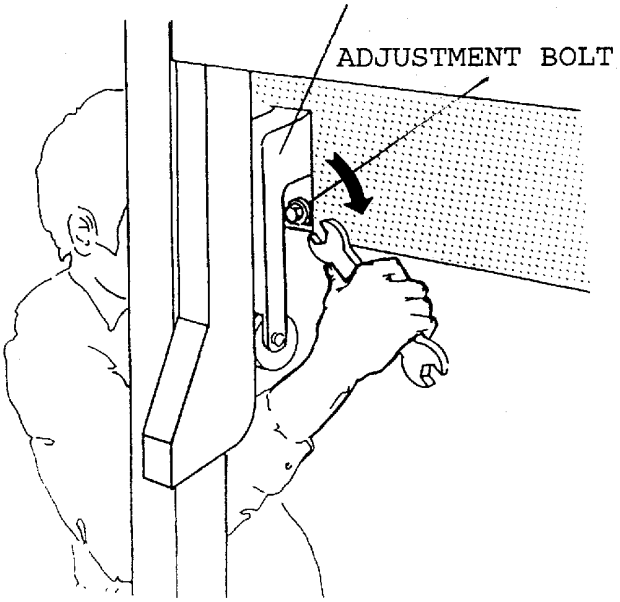

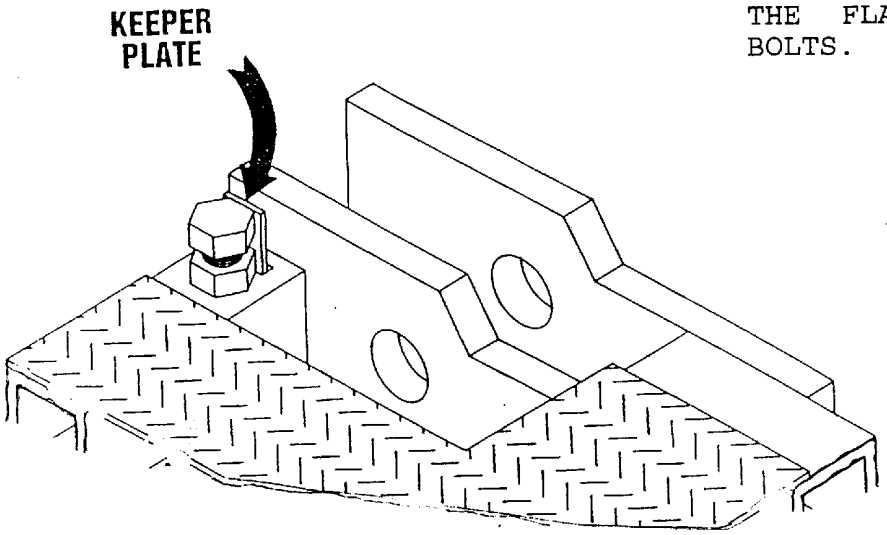

CAM FOLLOWER ADJUSTMENT

ADJUSTMENT OF THE CAM FOLLOWER MUST BE DONE BY THE FOLLOWING STEPS:

1. ROTATE THE PLATFORM CLOSER HANDLE CLOCKWISE UNTIL THE CAM FOLLOWERS ARE AGAINST ADJUSTMENT BOLTS.

2. RAISE THE PLATFORM TILL ONE OF THE CAM FOLLOWER ARMS IS TOUCHING THE ADJUSTMENT BOLT.

3. UNSCREW THE OPPOSITE SIDE ADJUSTMENT BOLT UNTIL IT TOUCHES THE CAM FOLLOWER ARM.

4. CONTINUE TO RAISE THE PLATFORM UNTIL IT REACHES UP STOPS. ENGAGE THE PLATFORM RETENTION CHAIN.

5. IF YOU CAN'T ENGAGE THE CHAIN, UNSCREW BOTH CAM FOLLOWER ADJUSTMENT BOLTS A LITTLE MORE.

6. REPEAT STEP 4 AND 5 UNTIL THE CHAIN IS ENGAGED.

7. OPEN THE PLATFORM AND BEND THE KEEPER PLATE AGAINST THE FLAT EDGE OF THE BOLTS.

NOTE: THE CAM FOLLOWER SHOULD NOT BE ADJUSTED TO THE POINT WHERE THE CHAIN ENGAGES LOOSELY. 1/8" GAP FROM CHAIN TO PIN IS SUFFICIENT.

If the LEFT HAND runner is not touching the stop then the LEFT HAND cable will require adjustment.

If the RIGHT HAND runner is not touching the stop the RIGHT HAND cable will require adjustment.

Proceed as described in the following sections.

Lower platform to the ground.

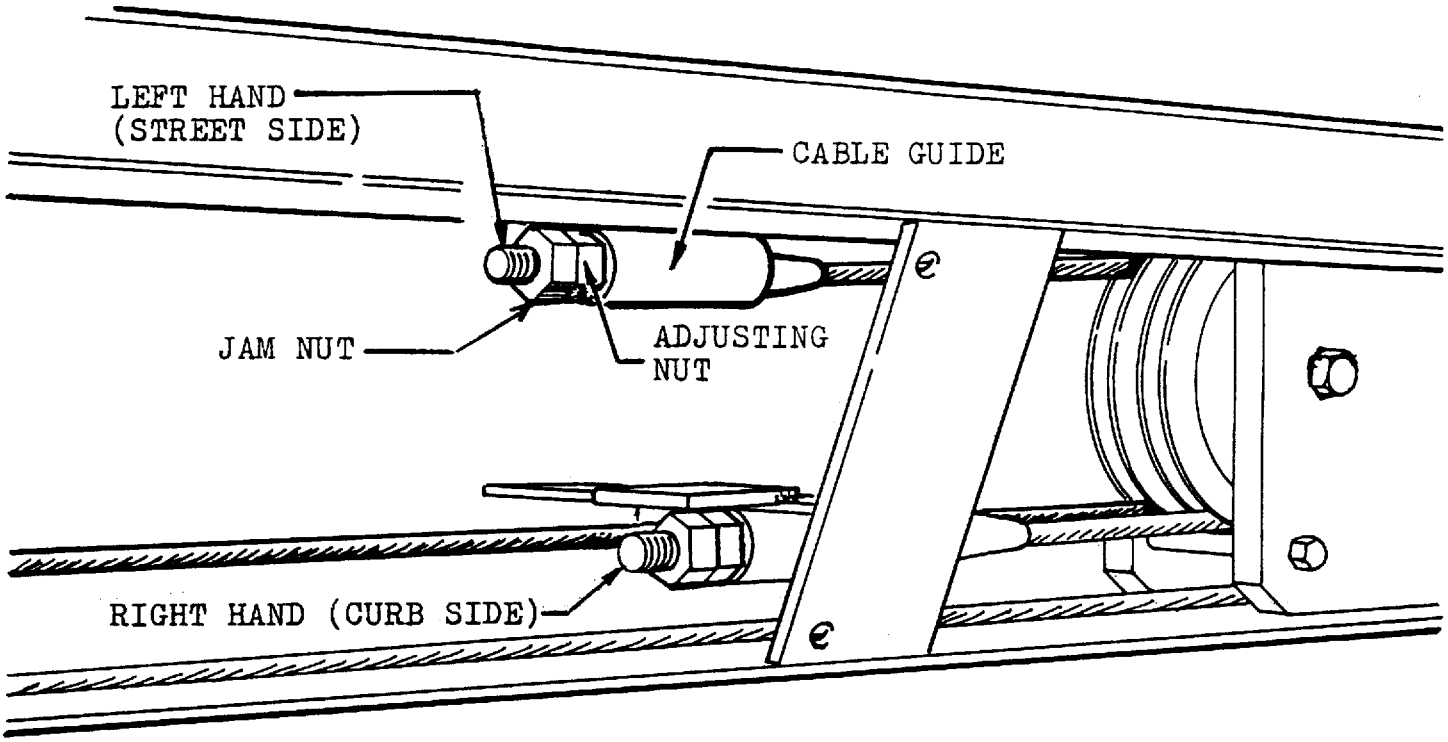

NOTE! LEFT HAND CABLE ADJUSTMENT IS ILLUSTRATED.

If the RIGHT HAND cable was the one to be adjusted the procedure is the same BUT THE LOWER CABLE FITTING WOULD BE THE ONE TO ADJUST.

Loosen jam nut. With a wrench screw adjusting nut in a clockwise direction to pull cable fitting thru the guide. If the gap between runner and stop was 3/8"(for example) then adjust nut against guide until 3/8" of cable fitting has been pulled thru the guide.

It may not be possible to obtain the correct adjustment the first time. Operate the unit and check the runners. If both runners touch the stops at the same time and 1" of cylinder rod shows from the barrel, the adjustment is correct.
If not, lower platform to ground and adjust accordingly on adjusting nut. Operate unit and re-check.
When adjustment is correct, tighten jam nut.

THE FOLLOWING MAINTENANCE SHOULD BE UNDERTAKEN EVERY 3 MONTHS

1. CHECK THE HOSE FOR CRACKING AND LEAKS.

2. CHECK THE ELECTRICAL WIRING FOR CONTINUITY AND THE CABLE ENDS FOR CORROSION.

3. VISUALLY CHECK THE COMPLETE UNIT FOR EXCESSIVE WEAR, WORN PARTS, REFORMED OR BROKEN STRUCTURES OR BROKEN WELDS. FOR PARTS REPLACEMENTS SEE BREAKDOWN DRAWING FOR YOUR UNIT IN SECTION 4 OF THIS MANUAL.

4. CHECK ALL BOLTS FOR TIGHTNESS.

5. CHECK THAT ALL WARNING DECALS ARE IN PLACE AND READABLE.

6. CHECK THAT ALL ROLL PINS ARE PROPERLY INSTALLED. REPLACE IF NECESSARY.

7. GREASE ALL AREAS THAT CREASE FITTING IS PROVIDED.

* COLD WEATHER OPERATION

Hydraulic Fluid Chart	
TEMPERATURE RANGE	ACCEPTABLE FLUIDS OR EQUAL
32 to 150° F	Exxon Univis J-26 Mobil DTE 24 Chevron EP9 Shell Tellus 927
-10 to 150° F	Exxon Univis J-26 Mobil DTE 13
-50 to 80° F	Mobil DTE 13 MIL-H-5606

SECTION 3: REPLACEMENT OF PARTS

CABLE REPLACEMENT Determine which cable needs replacing. NOTE! Both cables will usually wear out at the same time, therefore WE RECOMMEND that both cables be changed at the same time.

The following instructions cover changing BOTH cables. If only one cable is changed, use the appropriate sections for that cable.

NOTE: Be sure to save all parts that you remove as they are to be reused when the unit is reassembled.

Lower Platform to ground. Remove two bolts from the Runner Lug and the Cable Link Adapter.

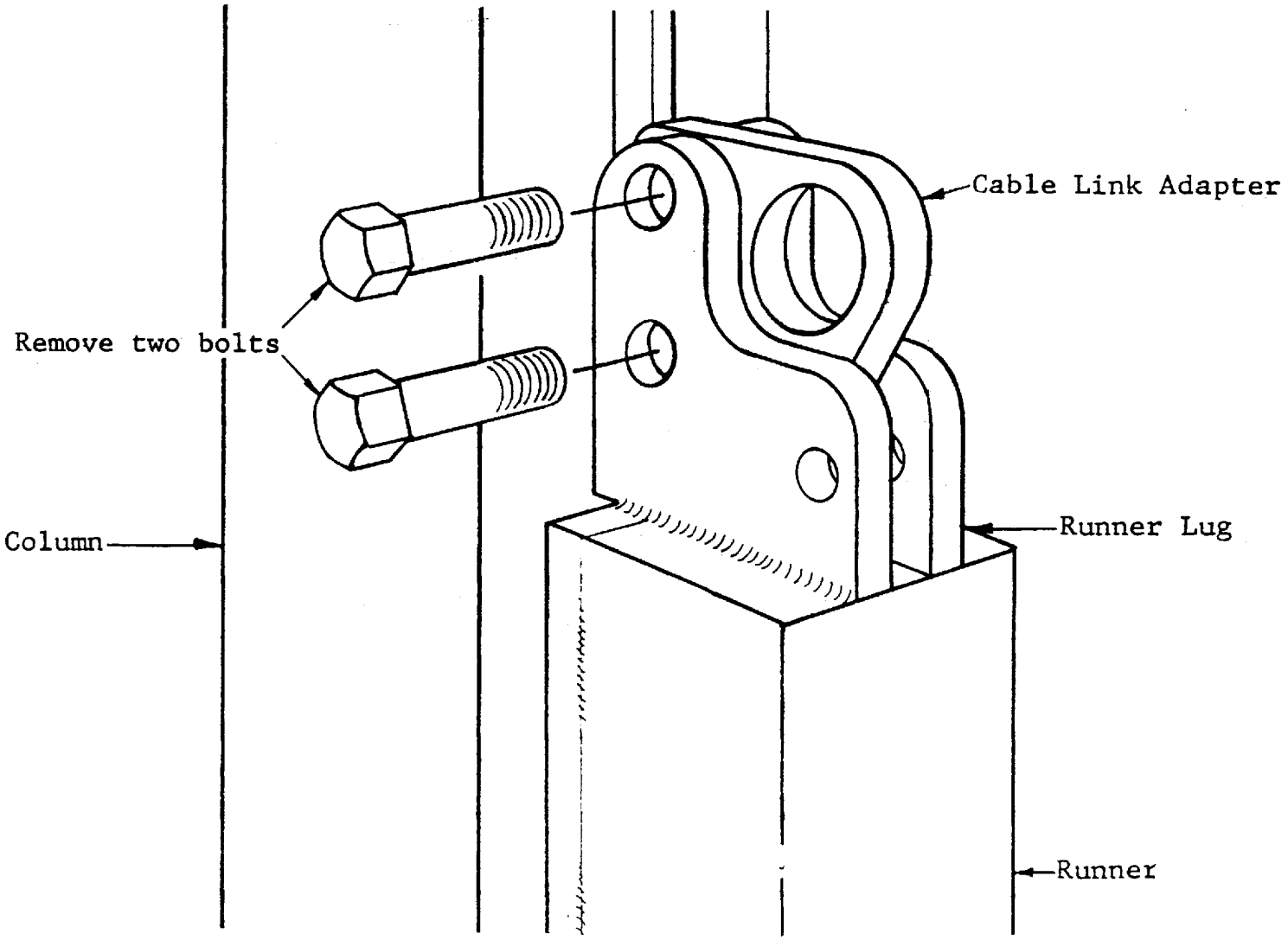

Remove the sheave covers from top of column. Before removing the 3/8" bolts holding the stop plates to the column, wedge a screwdriver underneath the plates. Untighten or remove bolts and lock washers and ease stop plates out of the column.

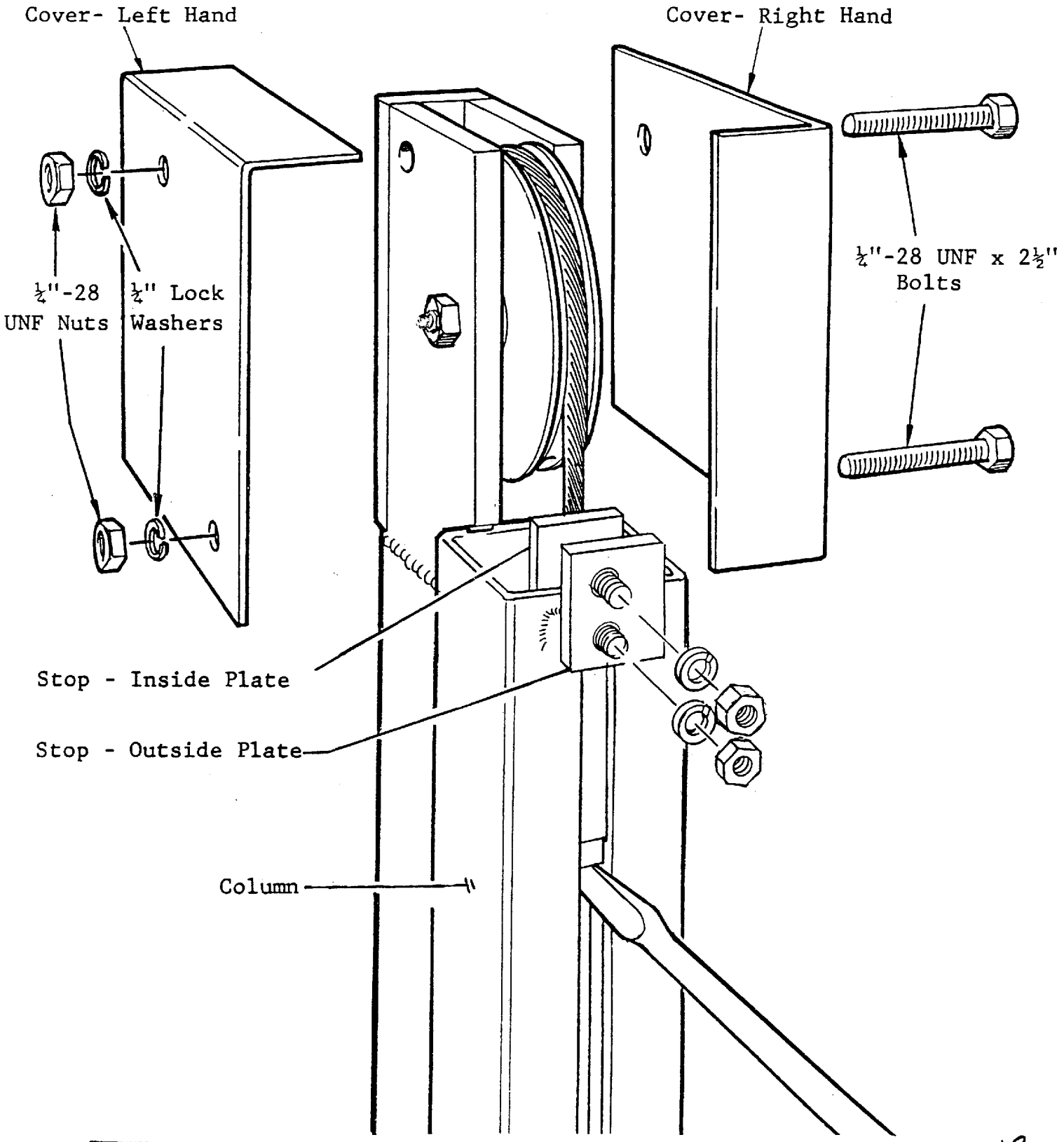

REMOVE THE SHEAVES FROM THE TOPS OF THE COLUMN ASSEMBLIES. CHECK THE BOLTS FOR WEAR IN THE AREA WHERE THE SHEAVE HAS BEEN ROTATING. IF THE BOLTS ARE WORN THEY MUST BE REPLACED.

WARNING! THESE ARE SPECIAL BOLTS AND COMMON-STOCK BOLTS CAN NOT BE SUBSTITUTED. ORDER THESE BOLTS BY THE PART NUMBER. FOR RC-2000 UNITS P/N 202438. FOR RC-3000/4000 UNITS USE P/N 202465. FOR RC-5000/6000 USE P/N 202465.

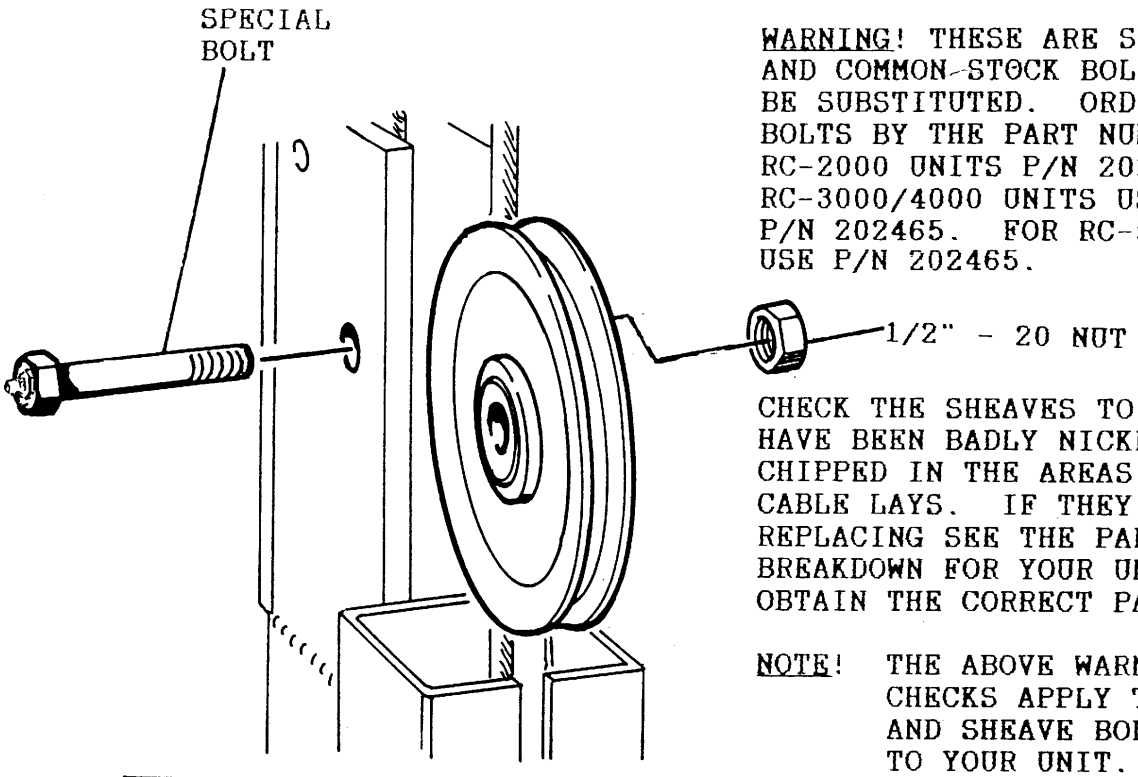

CHECK THE SHEAVES TO SEE IF THEY HAVE BEEN BADLY NICKED OR CHIPPED IN THE AREAS WHERE THE CABLE LAYS. IF THEY NEED REPLACING SEE THE PARTS BREAKDOWN FOR YOUR UNIT TO OBTAIN THE CORRECT PART NUMBER.

NOTE! THE ABOVE WARNING AND CHECKS APPLY TO ALL SHEAVES AND SHEAVE BOLTS INSTALLED TO YOUR UNIT.

WITH THE STOPS REMOVED, THE BRAKE ASSEMBLY CAN BE PULLED OUT OF THE COLUMN. THE CABLE END FITTING CAN NOW BE REMOVED FROM THE UPPER PORTION OF THE BRAKE ASSEMBLY.

NOTE! IT IS NOT NECESSARY TO REMOVE THE LOWER BOLT FROM THE BRAKE ASSEMBLY UNLESS BRAKE IS BEING REPLACED.

THE CABLE CAN HAND OUT OVER THE TOP OF THE COLUMN ASSEMBLY.

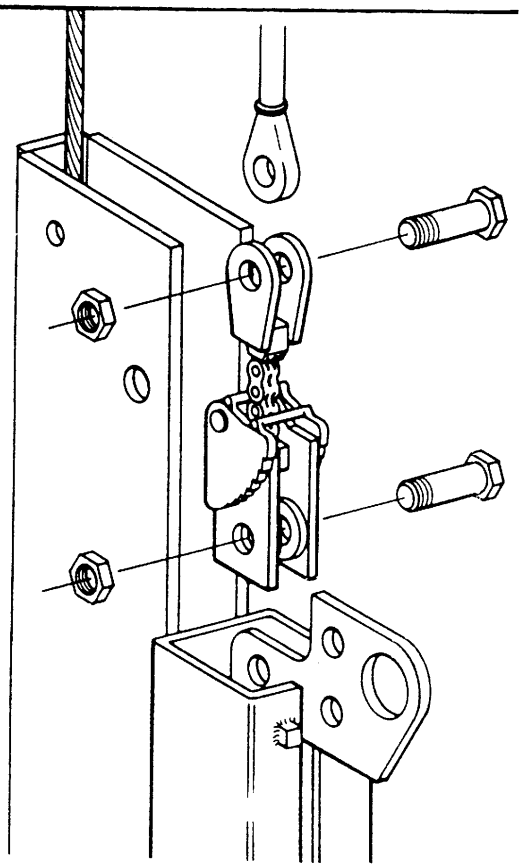

Remove main frame cover. If BOTH cables are to be removed, ALL FIVE SHEAVES will need to be removed from inside the main frame assembly. The left column sheaves, the two cylinder sheaves and the right column sheave.

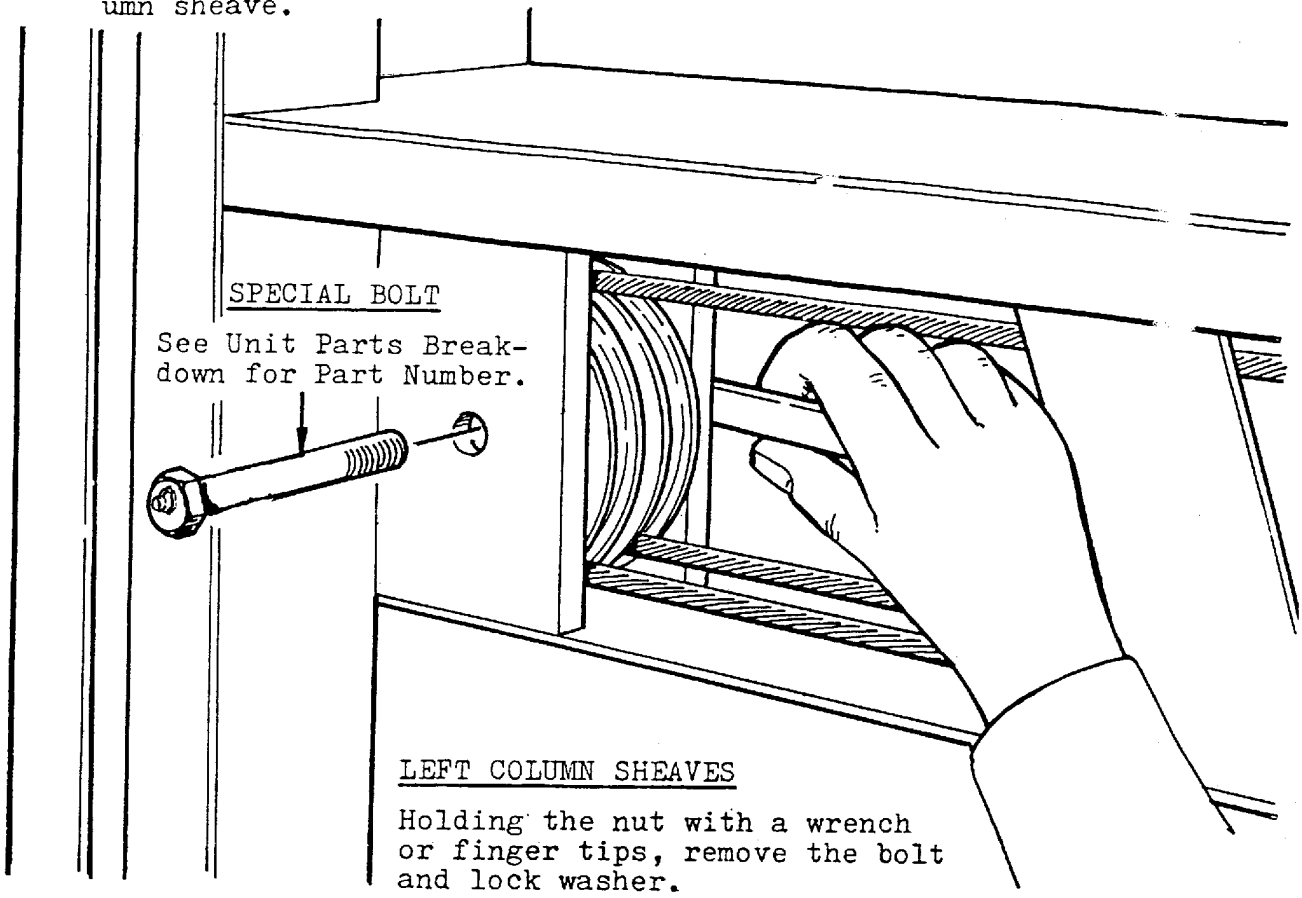

REMOVE BOTH SHEAVES AND SPACER WASHER (ONLY FOR RC-2 AND RC-3, WHICH IS IN BETWEEN THE SHEAVES) FROM THE ANCHOR PLATES.

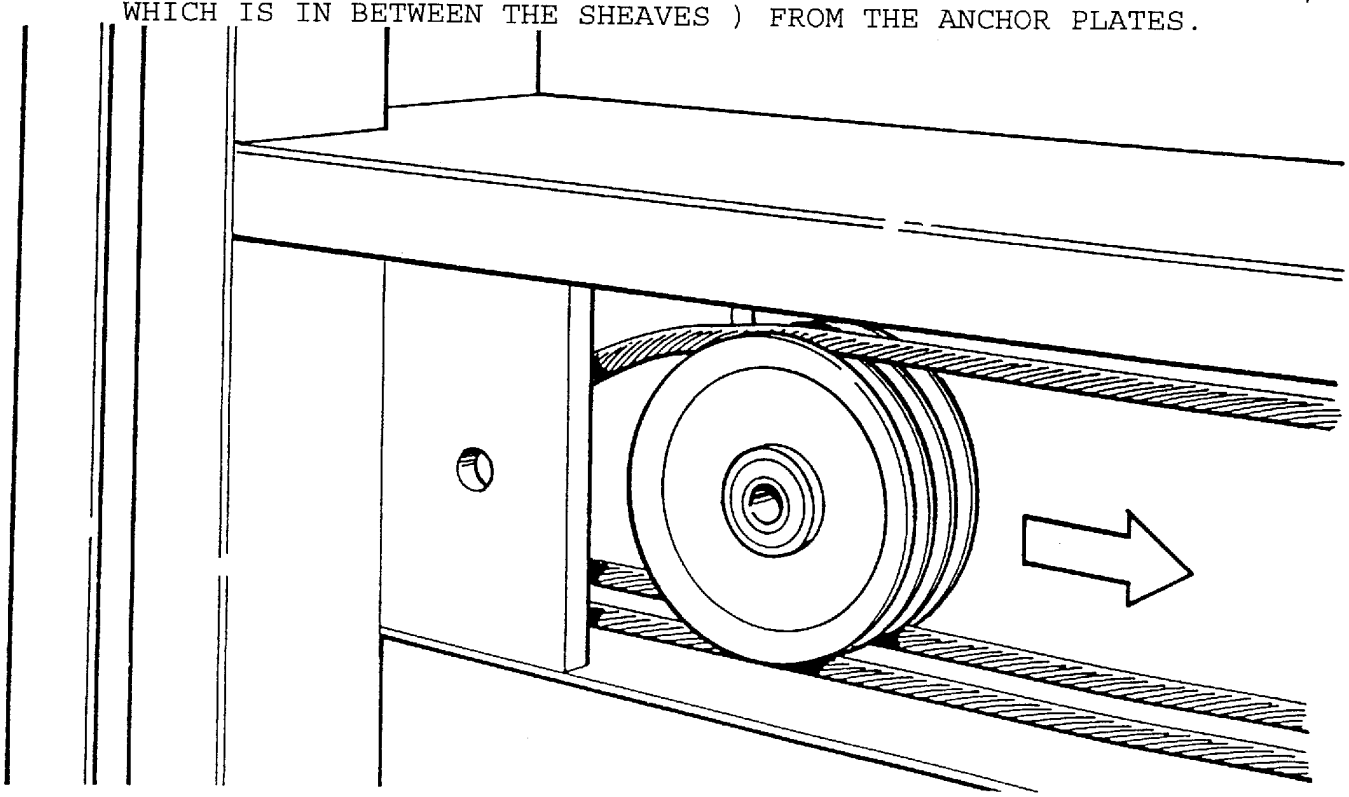

CYLINDER ANCHOR PLATE SHEAVES. In the same manner shown for the left column sheaves, remove the bolt and lock washer holding the sheaves in the cylinder anchor plates. (Special bolt.See breakdown Drg.for Part No Pull the sheaves out of the anchor plates. At the same time slide the cable end fittings to the left. The sheaves can now be removed.

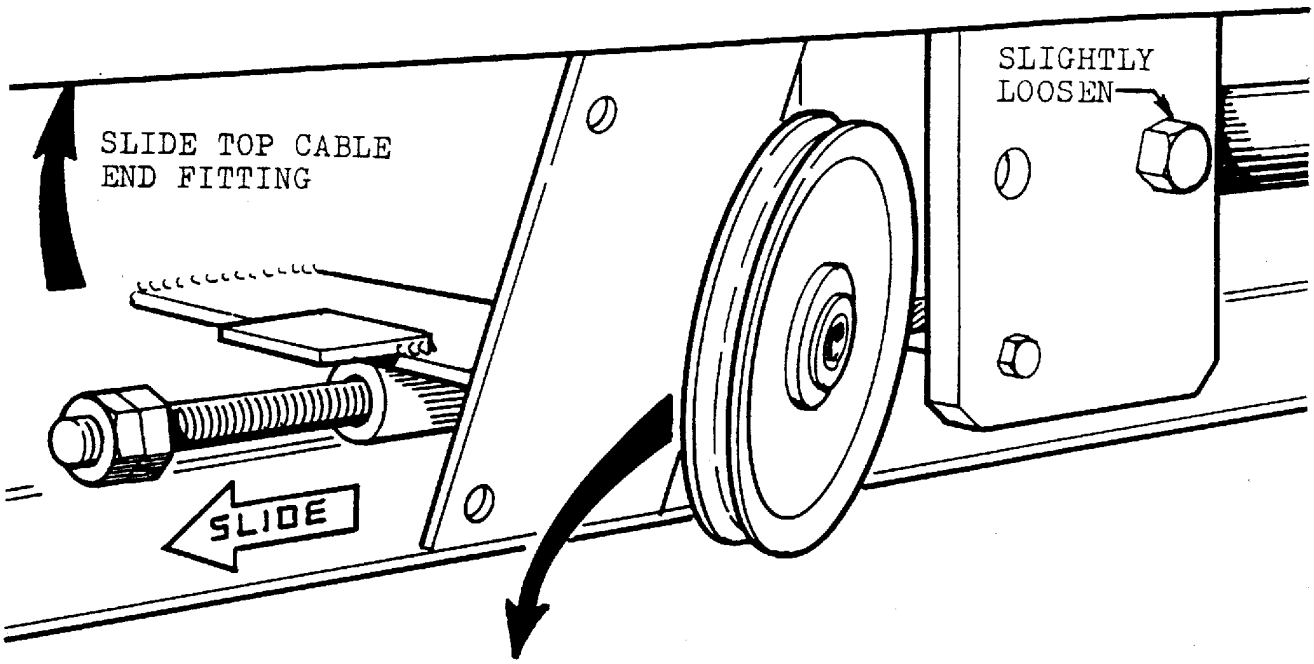

SHEAVES CAN BE PULLED
FROM ANCHOR PLATES

RIGHT COLUMN SHEAVE. To obtain access to the sheave, remove the bolt holding the butt end of the cylinder in the anchor plates. Slide the complete cylinder assembly to the left.

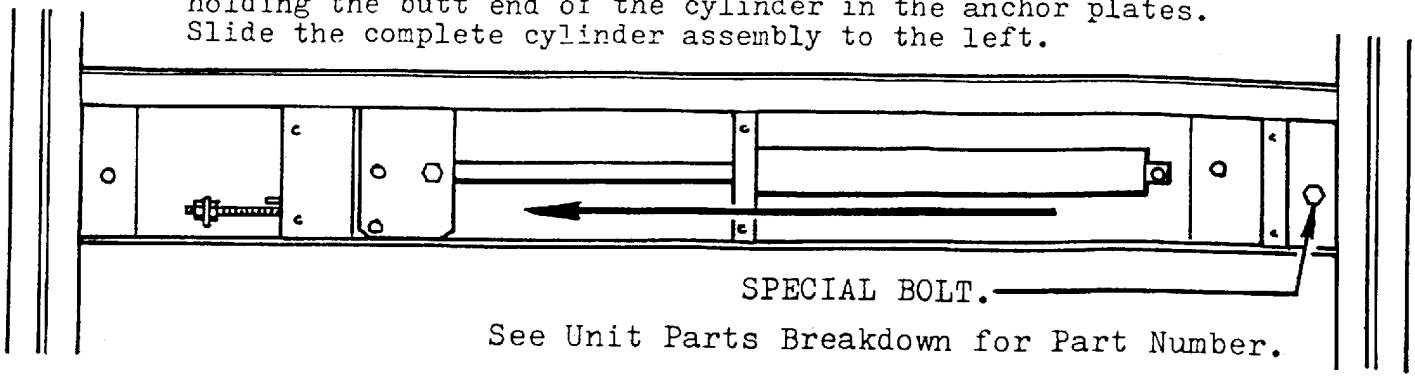

The sheave bolt can now be removed in similar manner to the other sheave bolts. Slide the sheave out of the anchor plates.

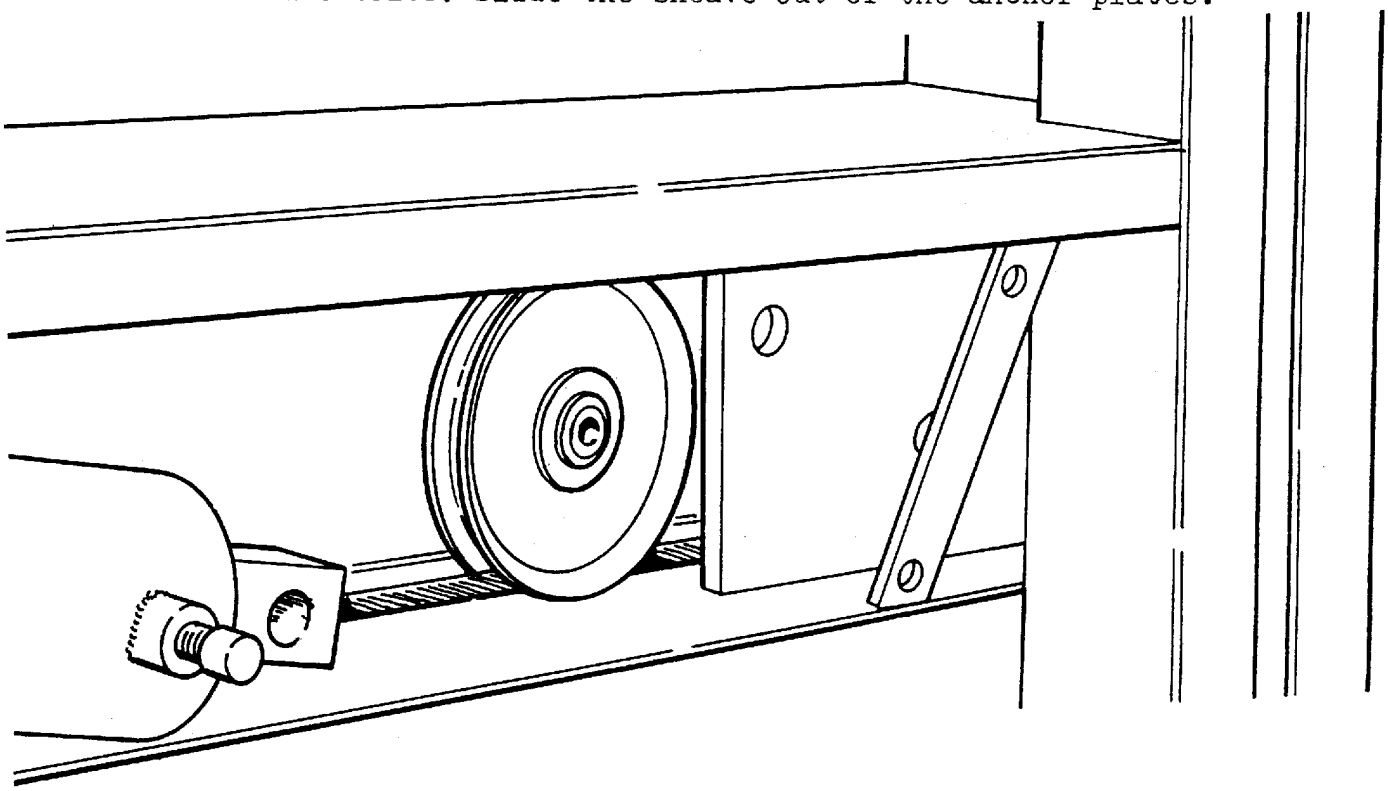

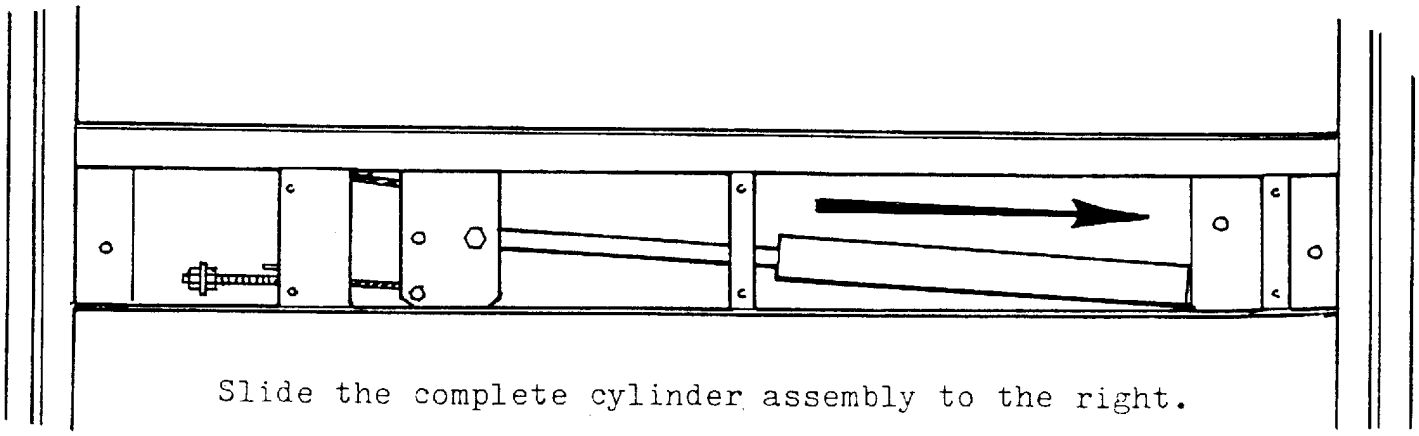

Slide the complete cylinder assembly to the right.

Remove the nuts from both cable end fittings. Pull the cable end fittings out of the tubes

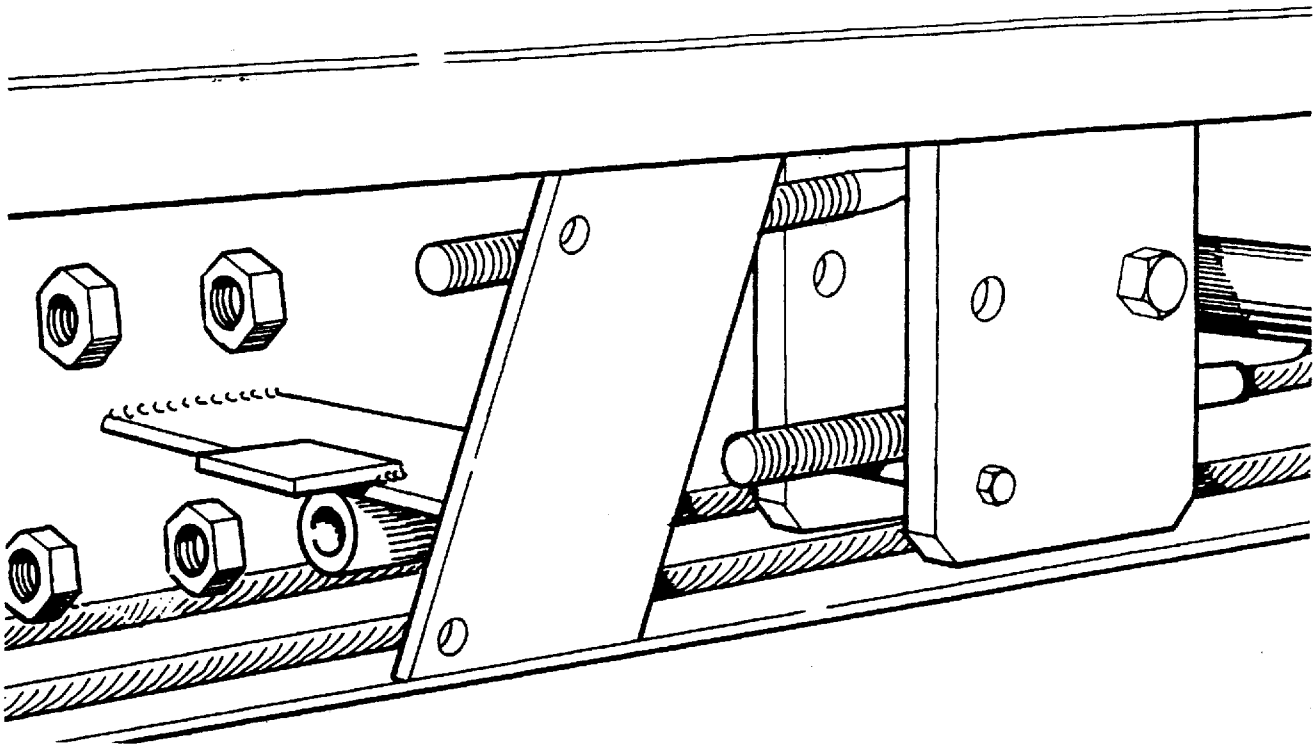

From the top of each column assembly pull the cables up and out of the unit.

INSTALLATION OF NEW CABLES.

Install the left hand cable first. This is the shortest of the two cables.
Insert the cable end fitting (threaded end) down into the cable enclosure.

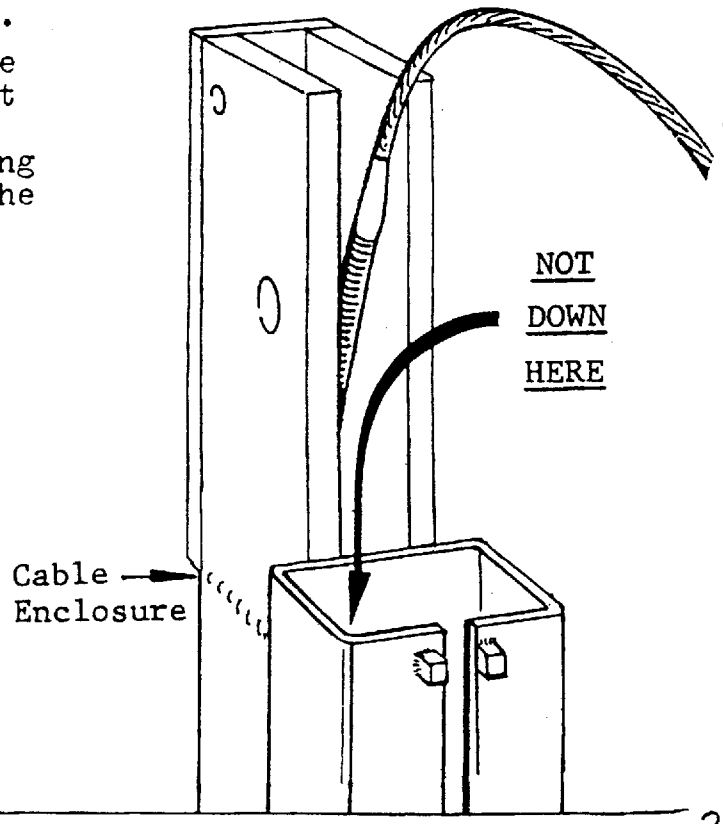

When the cable end reaches the bottom of the column, use a length of bent wire to fish the cable out into the main frame assembly.

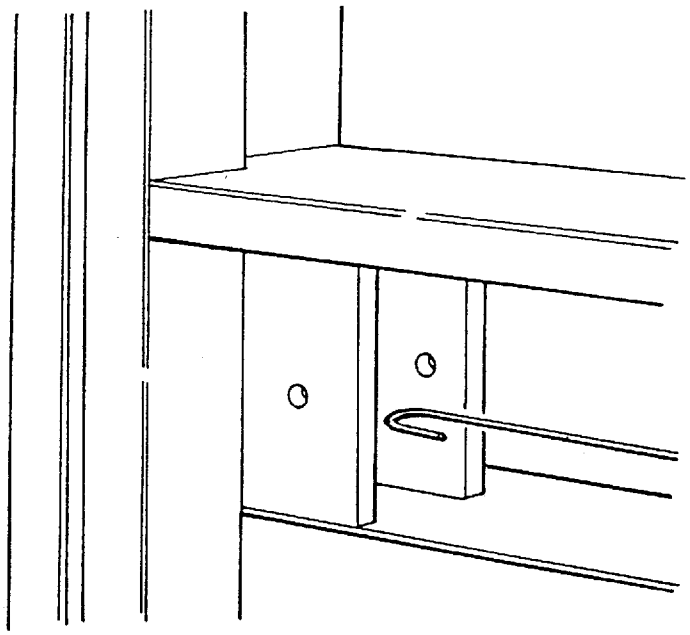

RC-2000 & 3000

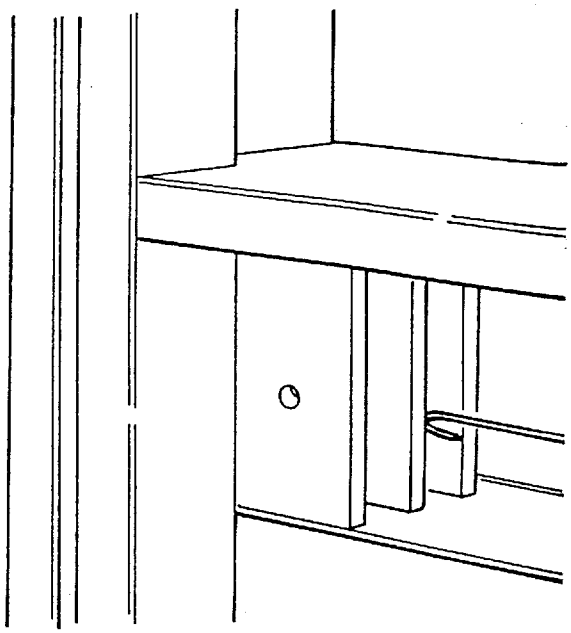

RC-4000/5000/6000

Pull approximately 3 feet of cable into the main frame assembly. Insert the threaded end of the cable into the top tube of the cable end retainer assembly. Install one nut to the cable end.

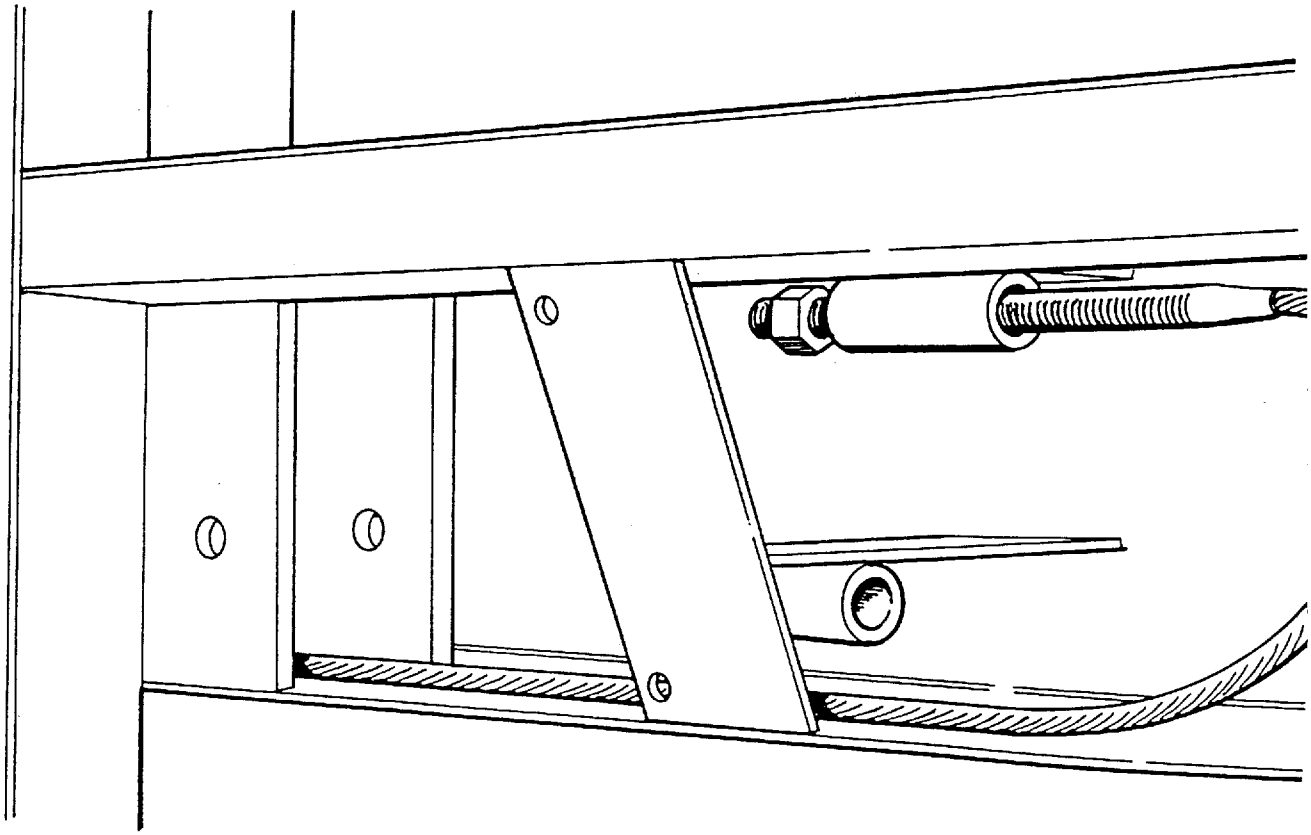

INSTALL THE SHEAVE TO THE TOP OF THE LEFT COLUMN ASSEMBLY. INSTALL THE CABLE FITTING TO THE RUNNER LINKS.

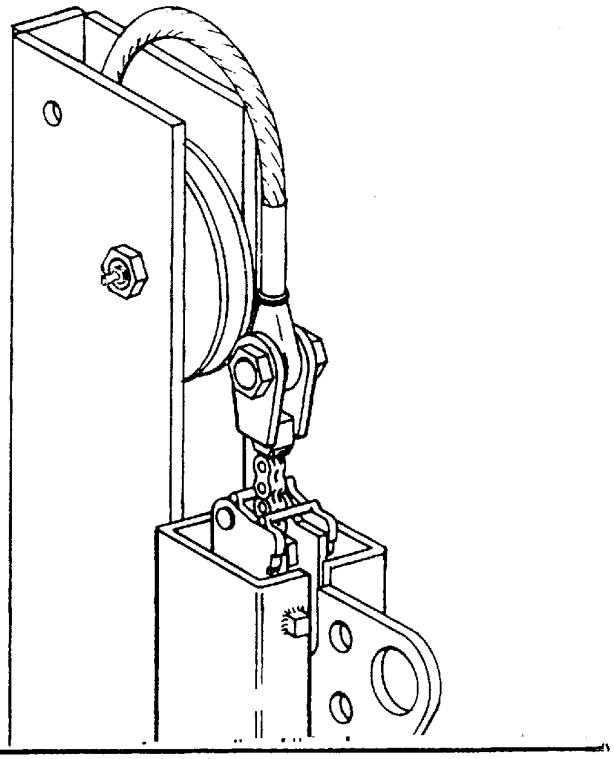

For the longer cable installation on the right hand column, use the same procedure that you used for the left hand column. Approximately 11 to 12 feet of cable will need to be pulled into the main frame assembly. To give a clearer picture, the illustration shows what will be the final lay of the right hand cable.

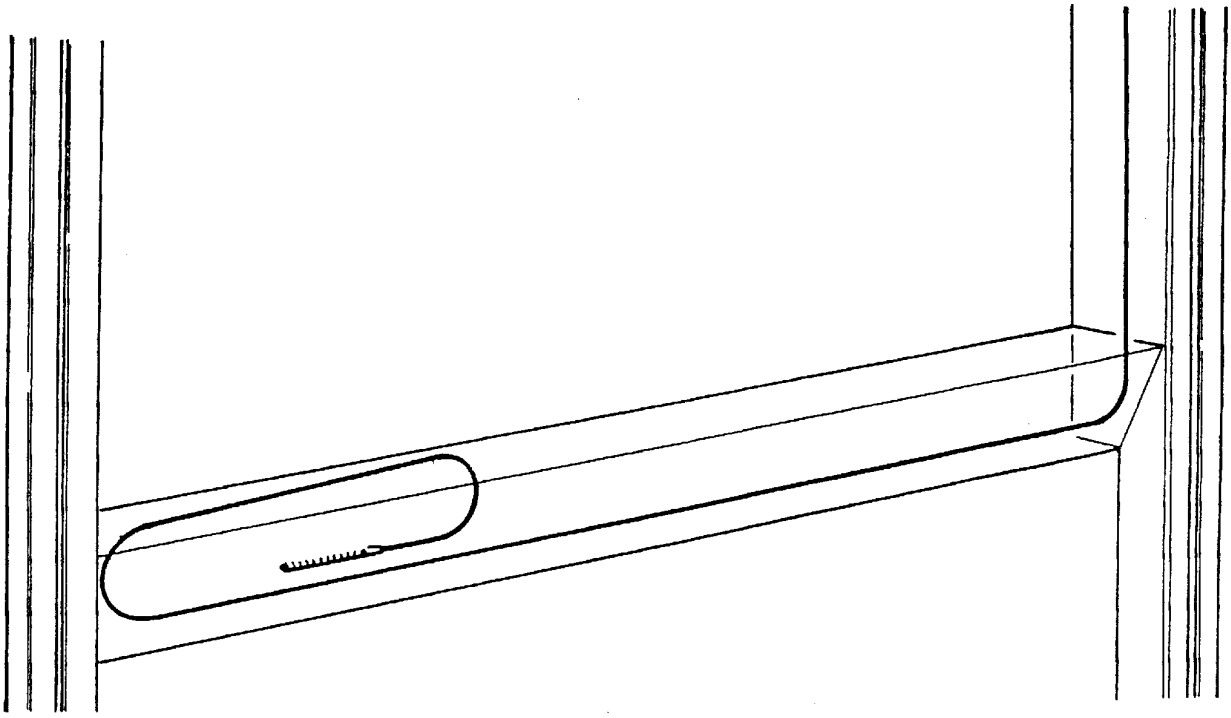

Insert the threaded end of the cable into the bottom tube of the cable end retainer assembly. Install one nut to the cable ends.

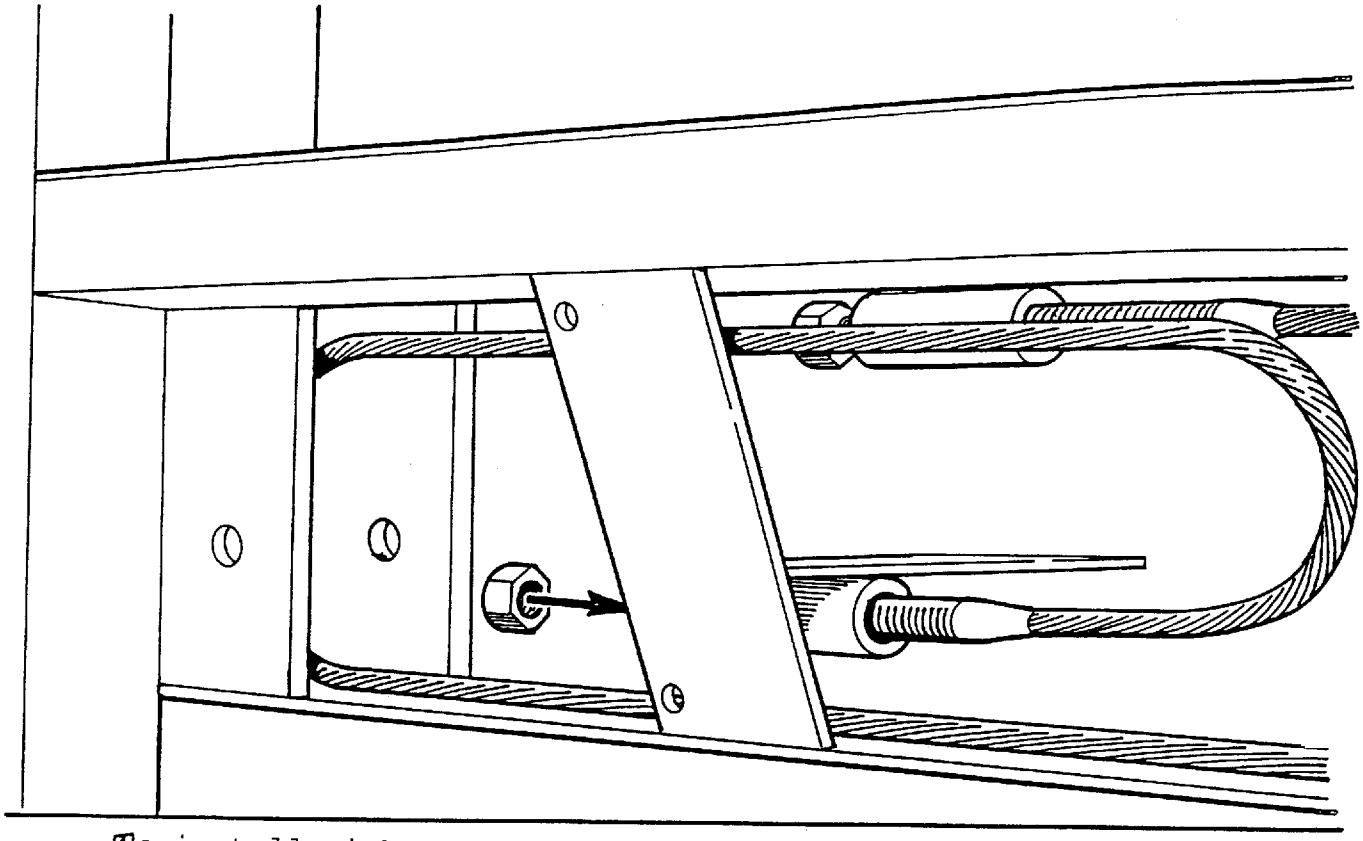

To install right hand pully, follow the same procedure that you used for the left side.

Install the 2 left column sheaves inside the main frame assembly. Be sure the cables are seated in the grooves of the sheaves. To start the nut on the bolt hold the nut between the fingers and insert behind the sheave anchor plate. Finish tightening nut with a wrench. NOTE THE LOCK WASHER IS UNDER THE HEAD OF THE BOLT.

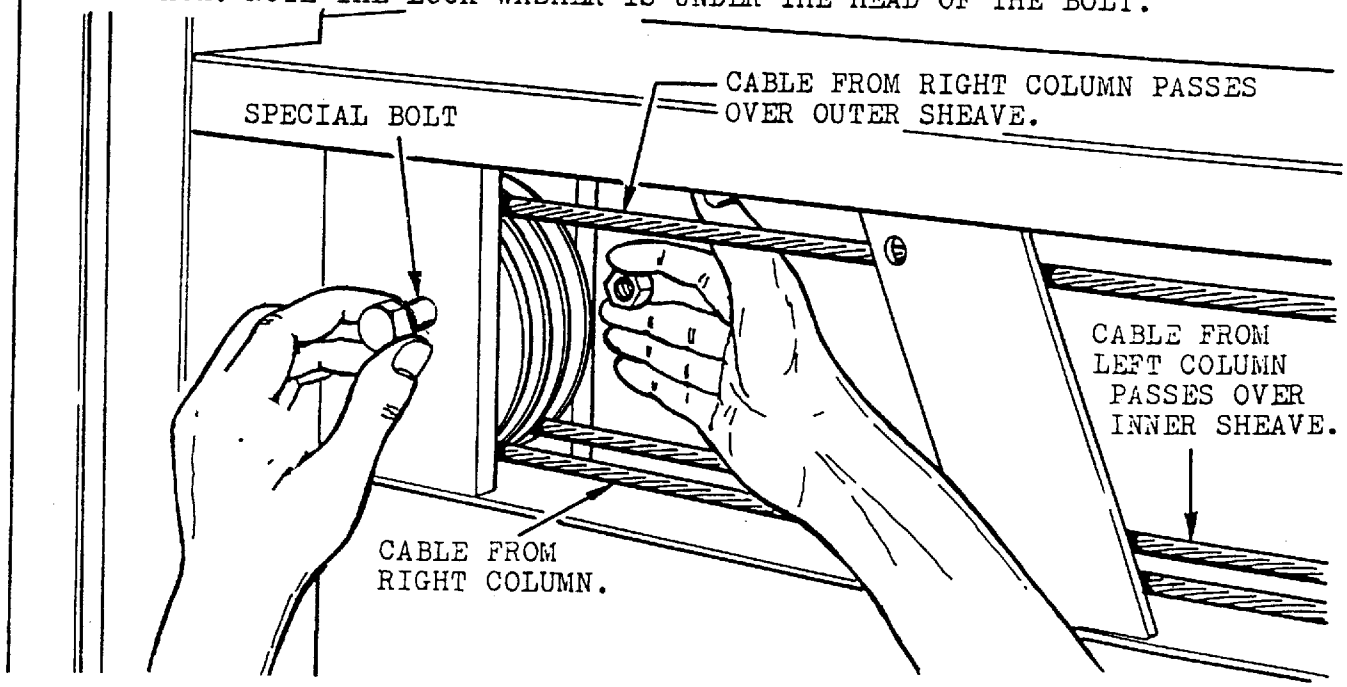

NOTE: FOR RC-2/3 PULLY ASSY. SEE PAGE

PULLEY ASSY FOR RC-2/3 ON CYL. ROD END AND LOWER LEFT HAND PULLEY BRACKET

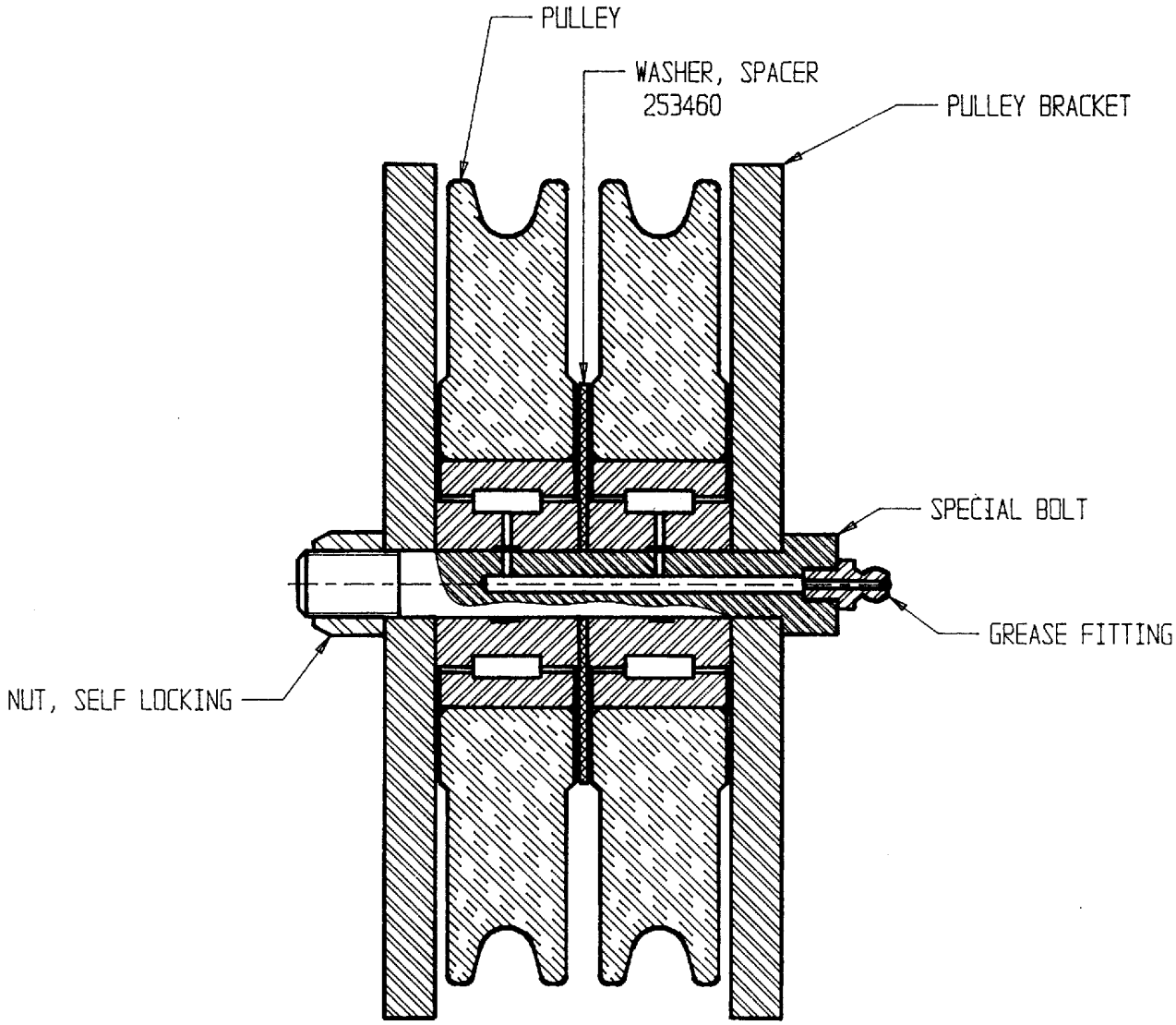

Move cylinder assembly to the left. Install the right column sheave. Be sure the cable is seated in the groove. The sheave is installed in the identical manner to the left column sheave.

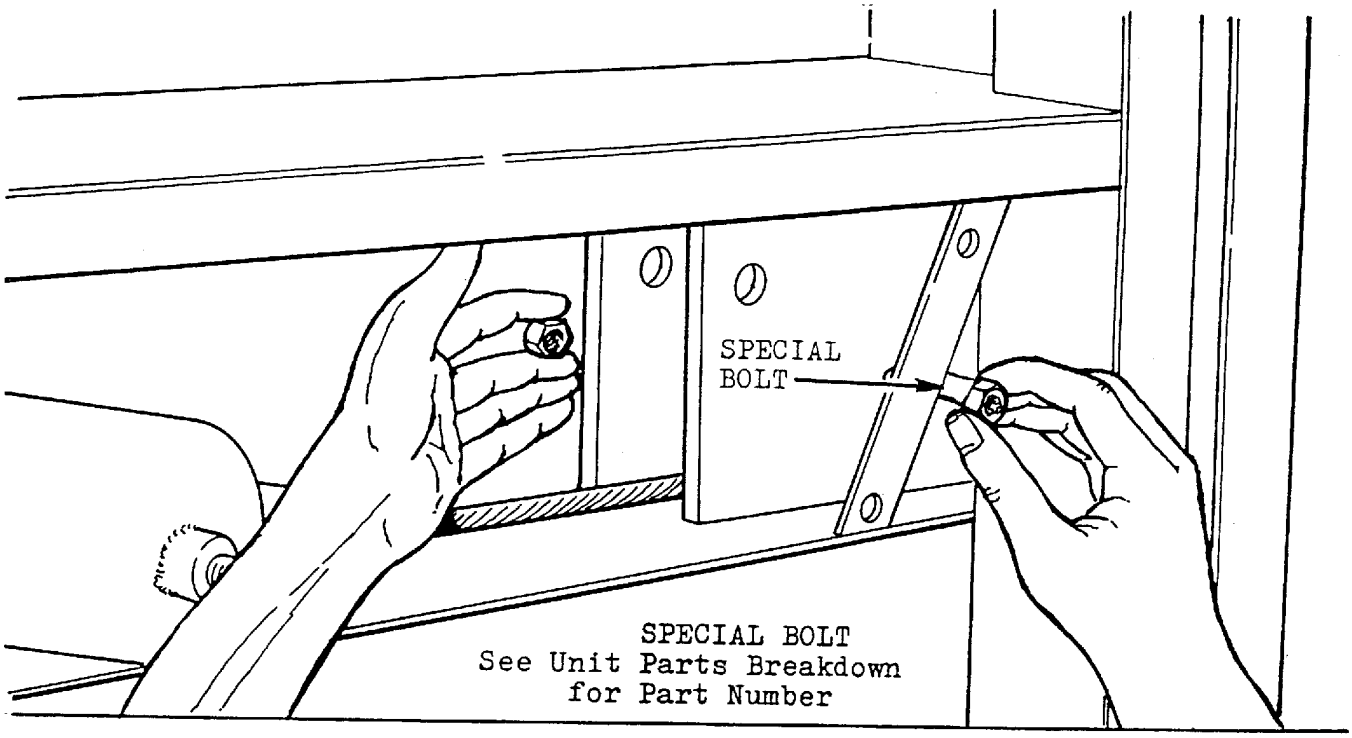

Install the butt end of the cylinder to the right hand anchor plate. This bolt is identical to the right hand sheave bolt. IT IS A SPECIAL BOLT. NO SUBSTITUTION ALLOWED.

Install the two cylinder anchor plate sheaves. Be sure that BOTH cables are seated in the grooves. The sheave bolt IS A SPECIAL BOLT. NO SUBSTITUTION ALLOWED.

The right and left hand runners can now be un-clamped and lowered down the column assemblies. This will take up most of the slack in the cable.

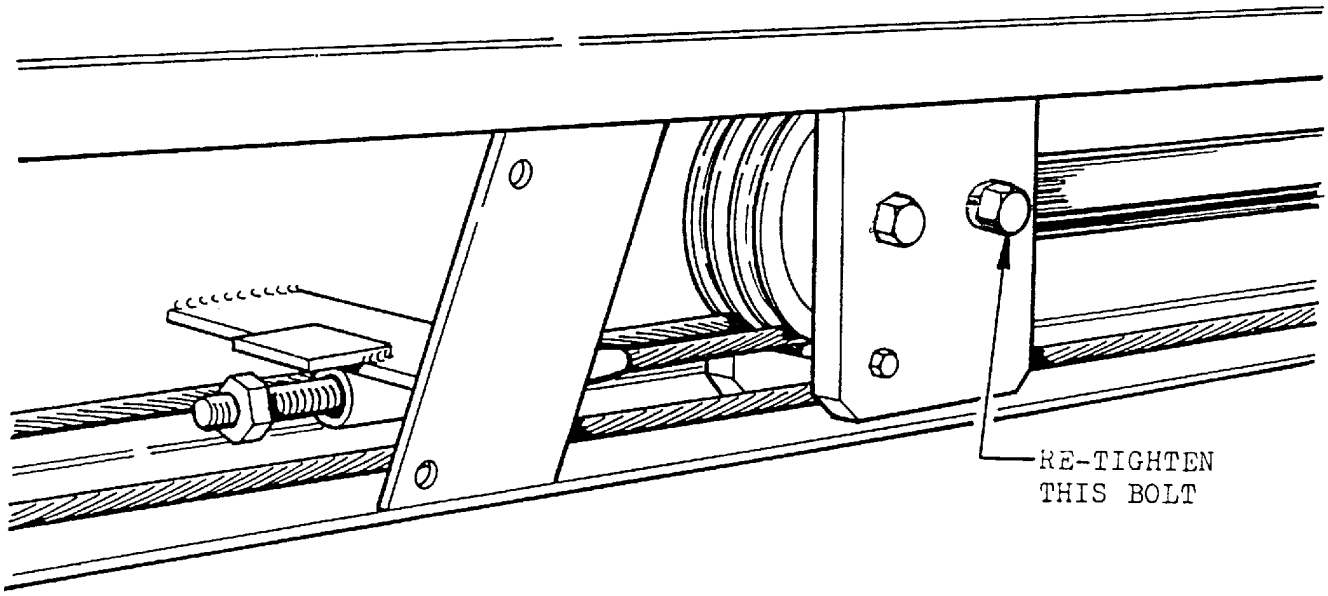

Install the remaining two nuts to the cable end fittings. Run the nuts down on the cable fittings to take up the remaining slack.

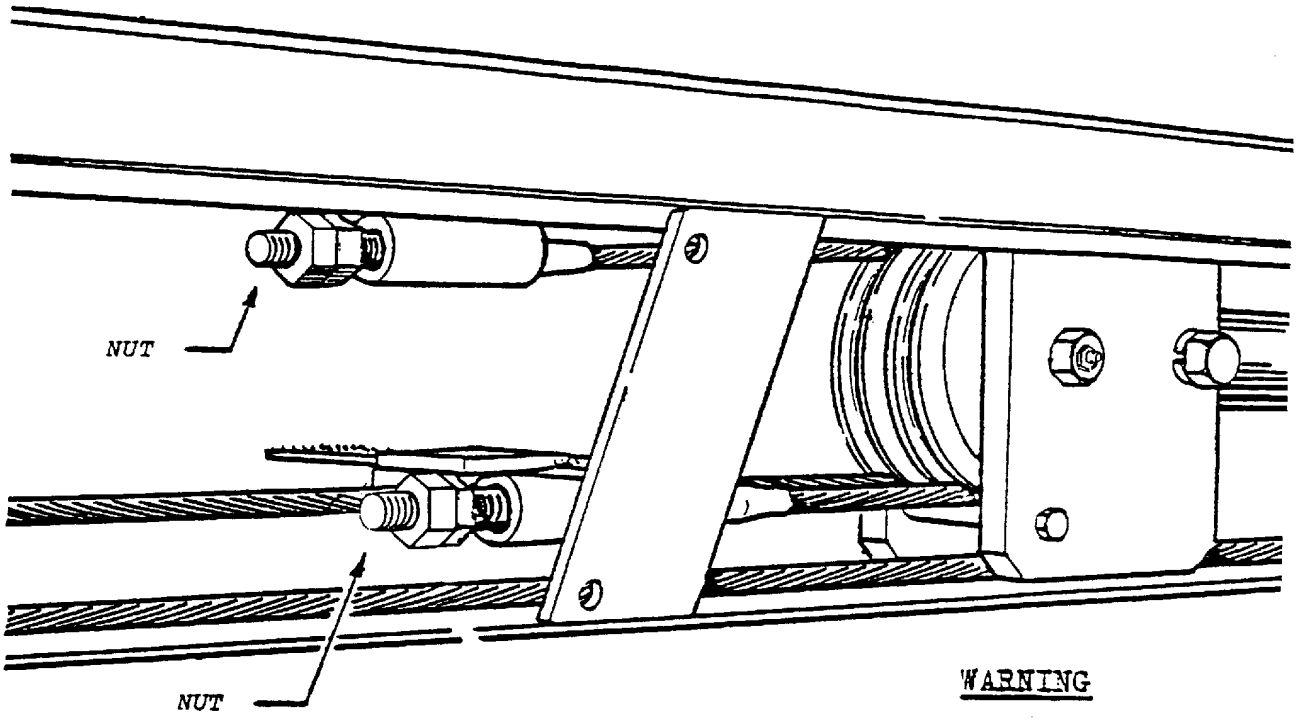

WARNING

CHECK THAT ALL BOLTS ARE TIGHT BEFORE OPERATING UNIT.

Stop plates must be installed in each column. The outside stop plates fit under and flush against the blocks welded to columns. The outside stop plates are the same for all MAXON rail lifts.

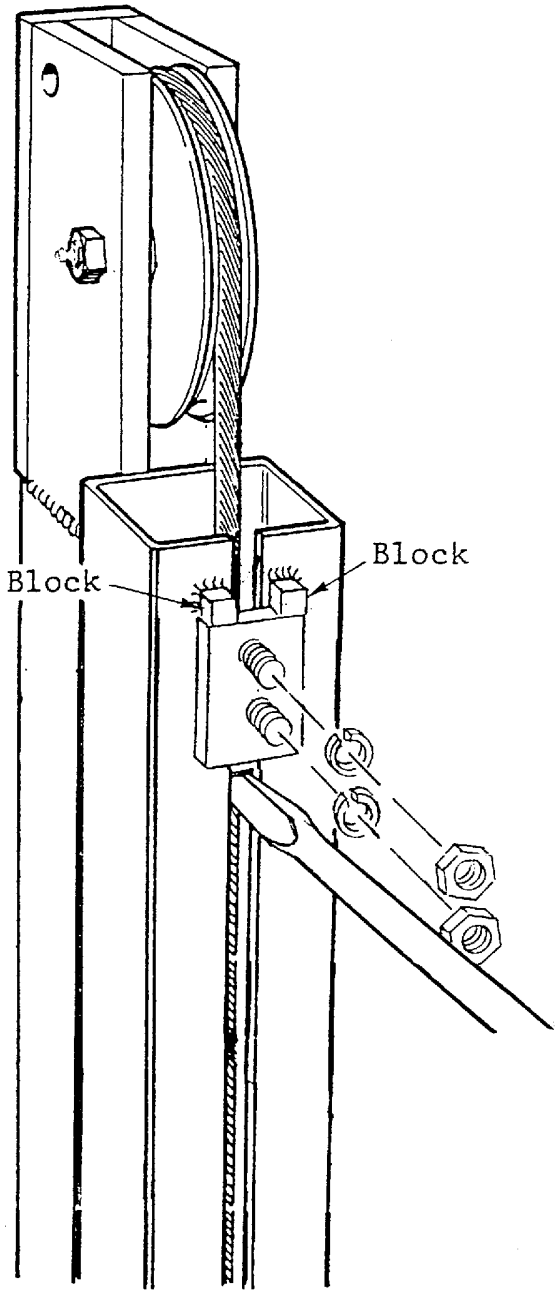

USE A SCREWDRIVER TO EASE STOP PLATES INTO COLUMN.

THEN INSTALL BOLTS AND LOCK WASHERS.

Adjusting New Cables.

Using curb side control switch raise platform until it is almost on a level with the top surface of the main frame assembly. DO NOT ALLOW RUNNERS TO HIT STOPS.
Release toggle switch.Check that the platform is level.If it is not level the required cable will need to be adjusted to bring platform level.See illustrations below.Platform can be lowered to make the adjustment.

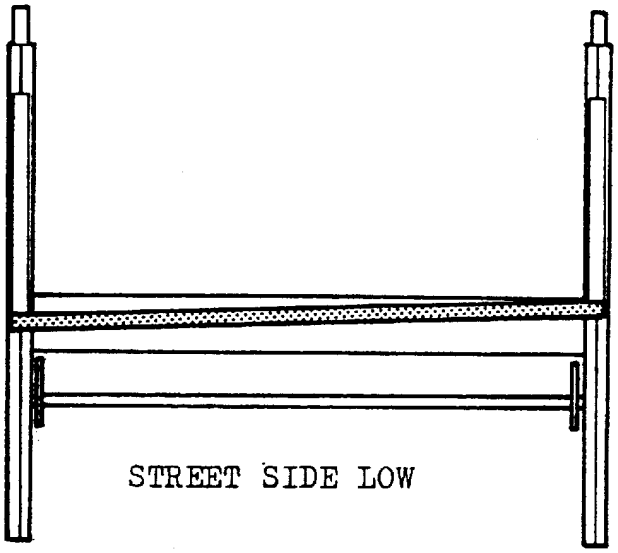

STREET SIDE LOW

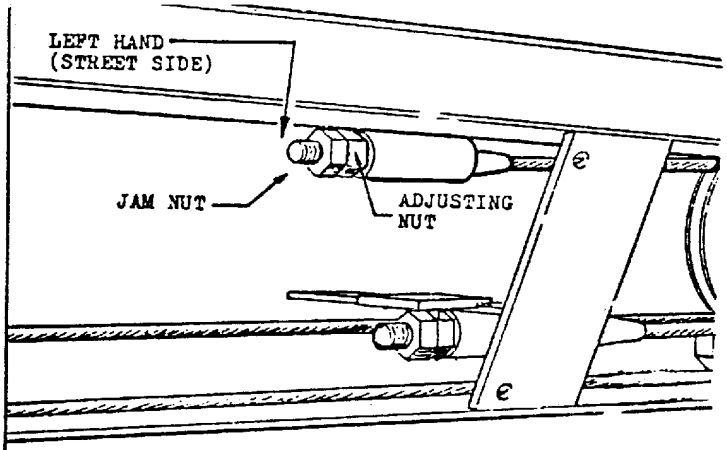

Adjust TOP cable.Run adjusting nut against tube until platform is level.

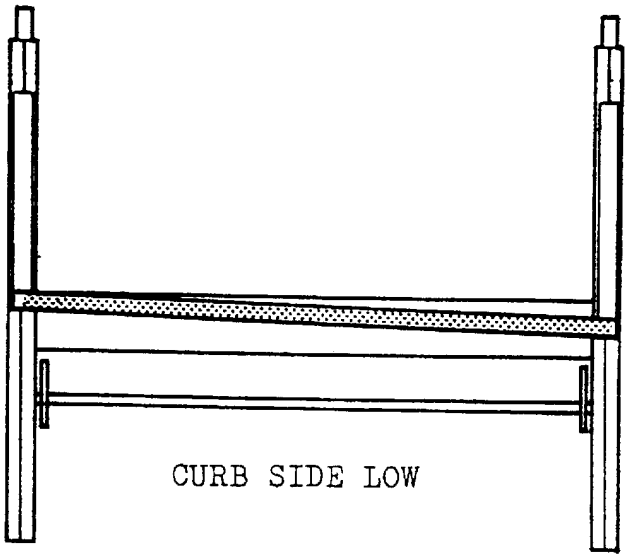

CURB SIDE LOW

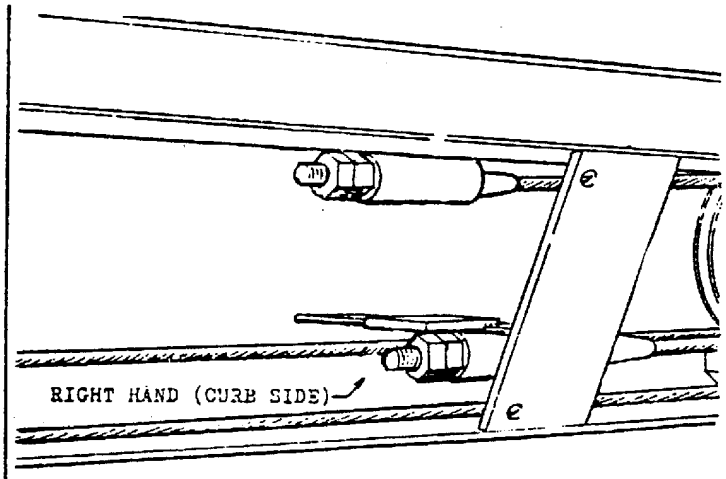

Adjust BOTTOM cable.Run adjusting nut against tube until platform is level.

USING CURB SIDE SWITCH RAISE PLATFORM UNTIL TOPS OF RUNNERS ARE ABOUT 1/4" FROM THE STOPS IN THE COLUMN ASSEMBLIES. RELEASE SWITCH TOGGLE.

"DO NOT ALLOW TOPS OF THE RUNNERS TO HIT STOPS."

"THERE MUST BE A GAP"

CHECK THE AMOUNT OF CYLINDER SHAFT EXTENDING FROM THE BARREL. THERE SHOULD BE 1-1/8" (MIN). IF YOU DO NOT HAVE THIS DIMENSION "BOTH CABLES WILL REQUIRED ADJUSTING EQUALLY TO GIVE THIS DIMENSION".

RUN PLATFORM UP TO MAIN FRAME ASSEMBLY AND CHECK THAT PLATFORM IS STILL LEVEL. ADJUST APPROPRIATELY IF NECESSARY.

THE OBJECT OF THE NEXT ADJUSTMENT IS TO ALLOW THE CURB SIDE RUNNER TO HIT THE STOP 1/2" BEFORE THE STREET SIDE RUNNER. THIS ADJUSTMENT IS MADE ON THE "LOWER" CABLE FITTING (RIGHT HAND, CURB SIDE CABLE). TIGHTEN THE ADJUSTING NUT AGAINST THE TUBE APPROXIMATELY 6-8 TURNS. RAISE PLATFORM. AS SOON AS THE CURB SIDE RUNNER TOUCHES THE STOP RELEASE THE SWITCH. CHECK THE DISTANCE BETWEEN THE TOP OF THE STREET SIDE RUNNER AND THE STREET SIDE STOP. IF THE MEASUREMENT IS 1/2" THE ADJUSTMENT IS CORRECT. IF IT IS NOT, LOWER THE PLATFORM AND ADJUST THE "LOWER" CABLE AGAIN. RAISE PLATFORM AND RELEASE SWITCH WHEN CURB SIDE RUNNER TOUCHES THE STOP. CHECK MEASUREMENT BETWEEN TOP OF STREET SIDE RUNNER AND ITS STOP. THIS ADJUSTMENT WILL PROBABLY HAVE TO BE MADE TWO OR THREE TIMES TO OBTAIN THE 1/2" DIMENSION.

WHEN ADJUSTMENT IS CORRECT, LOWER PLATFORM AND TIGHTEN STOP PLATE AND JAM NUT AGAINST ADJUSTING NUT ON BOTH CABLE FITTINGS.

NOTE! WITH THIS ADJUSTMENT THE PLATFORM MAY TEND TO RIDE SLIGHTLY OUT OF LEVEL. THIS IS TEMPORARY. AFTER UNIT HAS BEEN IN OPERATION WITH LOADS ON PLATFORM, THIS WILL CORRECT ITSELF.

REPLACE ALL COVERS. APPLY A LOAD (APPROXIMATELY 500 LBS) EVENLY DISTRIBUTED ON PLATFORM.

CYCLE LOAD UP AND DOWN ABOUT 20 TIMES. THIS WILL SEAT THE CABLES.

ADJUSTMENT IS NOW COMPLETE AND THE UNIT IS READY FOR USE.

LOWER PLATFORM TO GROUND. REMOVE COVER FROM MAIN FRAME ASSEMBLY. REMOVE THE CYLINDER BOLTS FROM THE SHEAVE ANCHOR PLATES.
NOTE! THESE ARE "SPECIAL BOLTS" NO SUBSTITUTION IS ALLOWED.
LOWER THE CYLINDER ONTO THE MAIN FRAME.

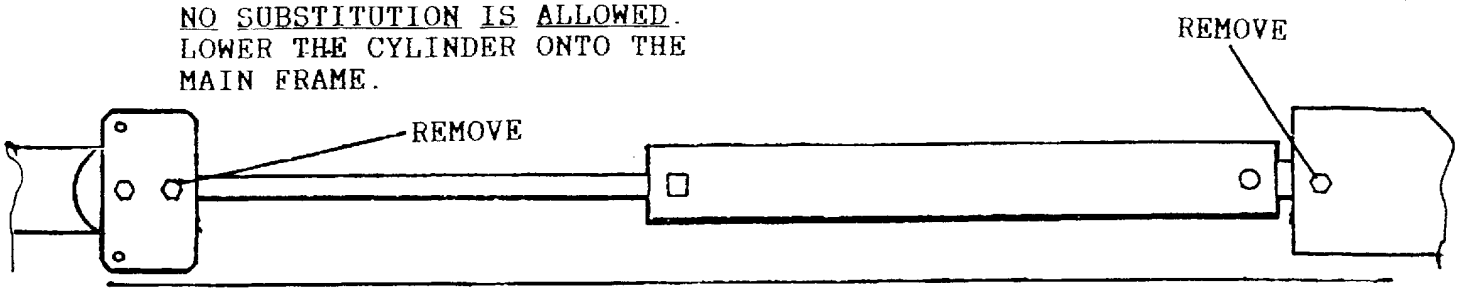

USING THE CURB SIDE REMOTE CONTROL MOVE TOGGLE SWITCH TO "RAISE" POSITION TO RETRACT THE CYLINDER SHAFT INTO THE BARREL.
RELEASE SWITCH WHEN THE SHAFT IS APPROXIMATELY HALF WAY RETRACTED.

REMOVE THE HOSE FROM THE CYLINDER.

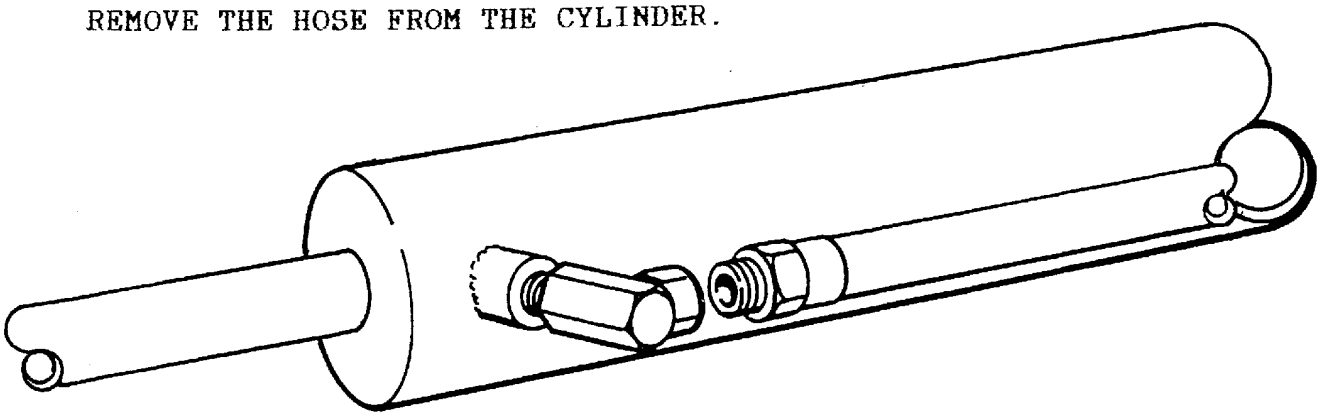

THE CYLINDER CAN NOW BE REMOVED FROM THE MAIN FRAME ASSEMBLY.

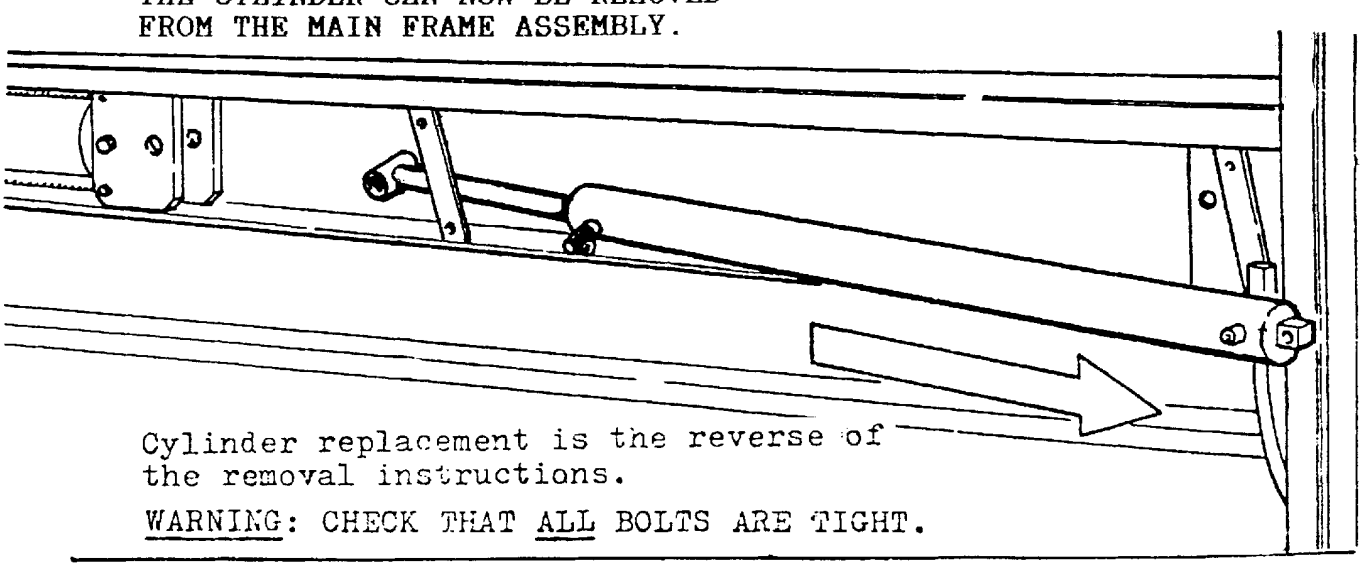

Cylinder replacement is the reverse of the removal instructions.

WARNING: CHECK THAT ALL BOLTS ARE TIGHT.